CITY OF PHILADELPHIA

REGULATIONS OF THE DEPARTMENT OF STREETS

TABLE OF CONTENTS

TITLE I SANITATION REGULATIONS

Chapter 1 Municipal and Private Collection of Refuse

1.1 Definitions

1.2 Separation of Refuse

1.3 Authorized Types of Receptacles And Other Containers

1.4 Collection Days, Set Out Times, and Placement of Refuse

1.5 Special Materials

1.6 Premises Eligible

1.7 Fee for Neighborhood Sanitation and Cleaning Services

1.8 Miscellaneous

1.9 Pilots and New Programs

1.10 Penalties and Enforcement

Chapter 2 Regulations for the Provision of Waste and Recycling Receptacles by Takeout Food Establishments.

2.1 Authority

2.2 Definitions

2.3 Scope of Regulations

2.4 Requirements for Regulated Businesses

2.5 Responsibility for Injuries to Persons or Property

2.6 Effective Date

TITLE II HIGHWAY REGULATIONS

Chapter 1 The Complete Streets Policy

Chapter 2 – Regulations Governing Street Construction, Openings, Excavations, and Restoration

2.1 Street Openings

2.1.1 Authority

2.1.2 Definitions

2.1.3 Permit Required

2.1.4 Method of Making Application

2.1.5 Street Opening and Street Occupancy Permits: Tier I

2.1.6 Street Opening and Street Occupancy Permits: Tier II

2.1.7 Street Excavations to Turn On / Shut Off Service

2.1.8 Street Occupancy Permit Procedure

2.1.9 Street Opening Requirements

2.1.10 Permit Fees for breaking Streets

2.1.11 Emergencies

2.1.12 Trench Standards, Steel Plate Procedures, Backfilling

2.1.13 Plumber's Ditches

2.1.14 Permanent Restoration of Pavement

2.1.15 Milling, Paving, Full Depth Restoration

2.1.16 Structures Within the Right-of-Way

2.1.17 Refrigerating Pipes

2.1.18 Tunneling

2.1.19 Responsibility for Injuries to Persons or Property

2.1.20 Severability

2.1.21 Repeal of Prior Versions

2.1.22 Effective Date

2.2 Regulations Governing Repair and Reconstruction of Alleys, Driveways, and Retaining Walls

2.3 Regulations Governing Construction of ADA-Compliant Curb Ramps

Chapter 3 – Regulations Governing Specifications for Paving, Structure Concrete, and Parking Lots

3.1 Paving

3.1.1 Pavement Subgrading

3.1.2 Guarantee

3.1.3 Materials

3.1.4 Construction Methods

3.1.5 Subbases

3.1.6 Base Courses

3.1.7 Sheet Asphalt Pavement

3.1.8 Bituminous Pavement (Hot-Mix)

3.1.9 Bituminous Concrete (Cold-Mix)

3.1.10 Composition of Mixtures

3.1.11 Asphalt Resurfacing

3.1.12 Pavements

3.2 Concrete Alley Driveways

3.3 Traffic Islands

3.4 Curb, Footways, and Driveways

3.4.1 Generally

3.4.2 Curbing

3.4.3 concrete Curbing

3.4.4 Stone Curbing

3.4.5 Repairs to and Resetting Curbing

3.4.6 Footway pavement Generally

3.4.7 Concrete Footway Pavement

3.4.8 Concrete Driveways

3.4.9 Footway and Driveway Repairs and Miscellaneous

3.5 Surface Parking Lots

3.6 Standard Specifications for Structure Concrete

3.6.1 Application

3.6.2 Definitions and Abbreviations

3.6.3 Standards

3.6.4 Drawings to be Followed

3.6.5 Sampling and Inspection

3.6.6 Testing Concrete

3.6.7 Classes of Structure Concrete

3.6.8 Materials

3.6.9 Storage of Materials

3.6.10 Proportioning and Mixing Concrete

3.6.11 Forms and Centering

3.6.12 Handling and Placing of Concrete

3.6.13 Removal of Forms and Falsework

3.6.14 Curing Concrete

3.6.15 Fixed and Expansion Joints

3.6.16 Preparation of Bearing Areas

3.6.17 Loads on Newly Finished Structure

3.6.18 Finish of Concrete Surfaces

3.6.19 Pneumatically Applied Mortar

3.6.20 Measurement and Payment for Concrete Work

3.6.21 Reinforcing Steel

3.6.22 Pre-cast and Pre-stressed Concrete Bridge Members

3.6.23 Post-tensioned Pre-stressed Concrete

3.6.24 Pressure Grouting

3.6.25 Waterproofing – Hot Application

3.6.26 Waterproofing – Cold Application

Chapter 4 Regulations Managing Use and/or Closure of the Right-of-Way

4.1 Right-of-Way Management

4.1.1 Authority

4.1.2 Definitions

4.1.3 Application for Right-of-Way Use License

4.1.4 Insurance

4.1.5 Evidence of Insurance Coverage

4.1.6 Self Insurance

4.1.7 Right-of-Way Use License and Agreement

4.1.8 Construction Permits

4.1.9 Right-of-Way User Fees

4.1.10 Street Degradation Fee

4.1.11 Application to City Agencies

4.1.12 Petitions for Reconsideration

4.1.13 Review and Recalculation of ROW user fees

4.1.14 Dumpsters (**Not Promulgated)**

4.1 Appendix A

4.1 Appendix B

4.2 Regulations Governing Temporary Street and Sidewalk Closures

4.2.1 Authority

4.2.2 Definitions

4.2.3 Scope of Regulations

4.2.4 Permit Required

4.2.5 Method of Making Application and Review

4.2.6 Standards and Conditions

4.2.7 Responsibility for Injuries to Persons or Property

4.2.8 Permit Fees

4.2.9 Repeal of Prior Versions

4.2.10 Effective Date

4.3 Regulations Governing Sidewalk Closure Permits for Construction Activity

4.3.1 Engineering Report or Site Safety Plan Required

4.3.2 Permit Fees for Placing Construction Materials in the Roadway
4.4 Permit Fees for Street Closures
4.4.1 Full Street Closures
4.4.2 Permit Fees for Temporary Street Closures
4.4.3 Permit Fees for PODS
4.4.4 Supplemental Inspection Fees
4.5 Bus Loading Zones
4.5.1 General
4.5.2 Definitions
4.5.3 Application for Bus Loading Zone Permit
4.5.4 Review of Application; Approval or Denial
4.5.5 Renewals
4.5.6 Revocation
4.5.7 Fee for Bus Loading Zones
4.6 Pedicab Regulations
4.6.1 License Required
4.6.2 License Requirements
4.6.3 Pedicab Routes and Hours of Operation
4.6.4 Required Equipment of Pedicabs
4.7 Pedestrian Enhancements
4.7.1 Guidelines
4.7.2 Application
4.7.3 Guidelines
4.7.4 Fees
4.7 Exhibit A
4.7 Exhibit B
4.7 Exhibit C
4.8 Regulations for Structures in the Right-of-Way
4.8.1 Newsstands and Newspaper Honor Boxes

4.8.2 Applications for the Installation for Curb or Sidewalk Pipe Posts on Paved Sidewalks

4.8.3 Banner Program on Streetlights

4.9 Regulations Governing Parking in the Right-of-Way

4.9.1 On-Street Residential Parking for Disabled Persons

4.9.2 Electric Vehicle Parking Spaces

4.9.3 Bicycle Parking Regulations

4.9.4 Flexpark – not promulgated

Chapter 5 – Regulations Specifying Special Designations

5.1 Shared Use Paths and Sidewalks

5.1.1 Definitions

5.1.2 Designation

5.1.3 Installation

5.1.4 Locations

5.2 Regulations Designating Snow Emergency Routes

5.3 Prohibition on Parking of Motor Vehicles on Non-Public Streets

5.3.1 Towing Zones

5.3.2 Penalties

Chapter 6 - Communications Antennas

6.1 Communications Antennas

6.1.2 Definitions

6.1.3 Communication Antenna Facilities Public Right-of-Way Permit.

6.1.4 Application for Communication Antenna Facilities Public ROW Permit (CAP)

6.1.5 Completeness Review

6.1.6 Issuance/Denial of CAP

6.1.7 Approval Rights

6.1.8 Fees

6.1.9 Development Standards

6.1.10 Compliance with Other Laws

6.1.11 Master License Agreement

6.1.12 Inventory and Accounting

6.1.13 Renewal of CAP

6.1.14 Provider Insurance

6.1.15 Street Occupancy and Opening Permits and Deadlines for Installation; Construction and Restoration Standards

6.1.16 Removal or Power Down of Communication Antenna Facilities

6.1.17 Non-Use of Communication Antenna Facilities

6.1.18 Requirements to Maintain Permits

6.1.19 Interference

6.1 Exhibit A

6.1 Exhibit B

TITLE I SANITATION REGULATIONS

Chapter 1 Municipal and Private Collection of Refuse

1.1 Definitions:

Invoice: An invoice, issued by the City, for the provision of collection service and related cleaning services for an identified six-month billing period.

Bulk items: Any large household item containing significant amounts of metal, such as an appliance or furniture, that would not fit into a 32 gallon trash receptacle, whether as a whole or as parts or pieces, and any items containing refrigerant, such as refrigerators and air conditioners.

Center City: This area includes the part of the City bounded on the East by the Delaware River, on the West by the Schuylkill River, on the North by Spring Garden Street (inclusive) and on the South by South Street (inclusive).

Collectible Rubbish: Solid wastes, including but not limited to, both putrescible and non-putrescible substances, and both combustible and non-combustible materials. Collectible Rubbish shall exclude Recyclable Materials, Yard Waste, Bulk Items and those materials and substances not collected by the City as identified in subsection 1.2 or collected pursuant to special collection rules as set forth in subsection 1.5.

Construction material: Any waste materials from construction, demolition or remodeling, including but not limited to, stones, bricks, rocks, concrete, gravel, earth, wood, metal, ceramics, drywall, and cinder or concrete block.

Household Hazardous Waste: Products or materials, such as paints, cleaners, oils, batteries, and pesticides, that contain corrosive, toxic, ignitable, reactive or other potentially hazardous ingredients.

Premises: Any building or other structure.

Private Business Litter receptacle: A rigid plastic or metal receptacle with a minimum size of 20 gallons placed by a private commercial business owner or manager at or near his/her business location for the reception of litter generated at such business.

Private Premises: Any premises or parking lot designed or used either wholly or in part for private residential, industrial or commercial purposes, whether inhabited or temporarily or continuously uninhabited or vacant, including any yard, grounds, walk, driveway, porch, steps, vestibule or mailbox belonging or appurtenant to such Premises.

Public Receptacle: A receptacle placed by the City at various locations for the reception of litter.

Recyclable Materials: the following:

Mixed Residential Paper: All paper products other than hardcover books, including, but not limited to, newspaper, corrugated cardboard, paper, computer paper, high grade paper, catalogs, magazines, soft cover books, telephone books, mail and light weight cardboard boxes (i.e., cereal boxes, shoe boxes, etc.).

Recyclable Glass: Any glass food or beverage container.

Recyclable Metal: Any aluminum, steel, bi-metal food or beverage container, or empty paint or aerosol cans.

Recyclable Plastic: All plastic jugs, cups, trays, plates, and packages marked #1 through #7.

Commingled Recyclables: Recyclable Glass, Recyclable Metal, and Recyclable Plastic.

Any other item that the Street Commissioner may designate as eligible for collection by the City for recycling.

Refuse: Includes Bulk Items, Construction Material, putrescible substances, Recyclable Materials, Collectible Rubbish, Yard Waste and all other waste materials.

Yard Waste: Leaves, tree and brush cuttings, and similar material. Yard Waste excludes grass trimmings/clippings.

1.2 Separation of Refuse:

Certain Refuse is not collected by the Streets Department and is listed in Section 1.2.4 below. Materials which are collected by the Streets Department shall be separated for curbside collection or drop off as follows.

1.2.1 Curbside Collection:

Collectible Rubbish and Yard Waste are eligible for weekly curbside collection, provided they are set out in the manner authorized in subsection 1.3 on their respective collection days.

Recyclable Materials shall be set out in authorized private receptacles in the manner authorized in subsection 1.3 separate from Collectible Rubbish and Yard Waste on their respective collection days. The Streets Commissioner may from time to time suspend the collection of any Recyclable Materials or initiate collection of new Recyclable Materialsas market conditions warrant. The Streets Department shall notify the public in advance of any such change.

Computers, monitors, televisions, tires, Household Hazardous Waste, Bulk Items andRefuse not collected by the City (see Subsection 1.4, below) may not be set out for curbside collection.

1.2.2 Drop Off At Convenience Centers:

1.2.2.1 The following types of Refuse will be accepted at Citizen Drop Off Centers designated by the Streets Commissioner:

Collectible Rubbish, but excluding Construction Material.

Recyclable Materials.

Computers, monitors, televisions, and other computer related equipment.

Yard Waste, provided it is not contained in plastic bags or mixed or contaminated with other material.

Bulk Items.

Tires. Limited to four per day.

Christmas trees.

Mattresses and box springs fully contained in a sealed, plastic bag.

1.2.2.2 In addition to the separation requirement of this Section, City residents wishing to use the Citizen Drop Off Centers must show proof of Philadelphia residency at the Center, must use a vehicle with a gross vehicle weight (GVW) of 6,000 pounds or less, and must have the Refuseproperly tarped, secured, or otherwise contained in such a manner as to prevent the Refusefrom being blown or scattered from the vehicle.

1.2.3 Special materials. Christmas trees, Tires, Yard Waste, Mattresses and Box Springs, and Household Hazardous Waste are subject to the special collection requirements set forth in subsection 1.5.

1.2.4 Refuse Not Collected By the City. The following Refuse is not collected by the City and shall not be set out for collection nor taken to a Citizen Drop Off Center:

Highly flammable substances, explosive or radioactive materials, toxic or corrosive substances, or otherwise hazardous material which shall be disposed of as prescribed by the Fire and Health Departments;

Pathological wastes from medical offices and clinics, which shall be disposed of as prescribed by the Health Department;

Grass trimmings/clippings. Grass trimmings and clippings should be mulched into the lawn or collected by private landscaping/collection companies.

1.3 Authorized Types of Receptacles And Other Containers:

1.3.1 Collectible Rubbish may be set out for curbside collection as follows:

A metal or other non-corrodible receptacle having a tight-fitting lid or cover with a capacity of not more than thirty-two (32) gallons may be used.

A substantial, leak-proof plastic bag with no smaller than a 30 gallon capacity may be used.

Certain large items that do not fit into such receptacles may be set out, pursuant to the requirements of subsection 3.C. below.

Plastic bags smaller than 30 gallons, paper bags, cardboard boxes and receptacles larger than 32 gallons may not be used.

1.3.2 Yard Waste may be set out for curbside collection as follows:

Except during the "leaf season," Yard Waste may be placed in receptacles and bags authorized for use with Collectible Rubbish, and may be commingled with Collectible Rubbish.

During the "leaf season," meaning a period of time in November and/or December publicly announced by the Streets Department and advertised on the City's website, Yard Waste may only be set out in large recyclable Yard Waste bags.

1.3.3 Recyclable Materials may be set out for curbside collection as follows:

Mixed Residential Paper and Commingled Recyclables shall be set out in containers provided by the City, in metal or other non-corrodible receptacles, or in large recyclable paper bags which are designed to withstand the elements (such as Yard Waste bags).

No container, receptacle or bag shall exceed 32 gallons in size.

Corrugated boxes must be flattened, stacked, and compacted into a consolidated unit. They may be placed in a container, receptacle, or large paper bag as in (i) above, or may be set out separately if tied.

Plastic bags, small paper bags and cardboard boxes may not be used.

1.3.4 Weight Limit. No container, receptacle or bag set out for curbside collection of Collectible Rubbish, Yard Waste or Recyclable Materials shall exceed 40 pounds in weight when filled.

1.3.5 Quantity Limit.

The limit for curbside collection of Collectible Rubbish and Yard Waste per collection week per Premises is:

For single-family residences, four receptacles.

For all other Premises eligible for collection, six receptacles.

In place of any receptacle, two plastic bags may be set out per week, up to a maximum of 12 bags per Premises.

A maximum of two items that do not fit in a 32 gallon receptacle, but that do not constitute a Bulk Item, and that are compactable in a City waste collection vehicle, may be set out per week per Premises.

There is no limit to the number of containers, receptacles or bags that may be set out for collection of Recyclable Materials.

1.3.6 Other Restrictions.

No container or receptacle set out for collection shall have ragged or sharp edges or any other defect that may injure the person emptying it.

All bags, bundles, containers and receptacles shall be secured and covered if necessary so as to prevent their contents from being scattered or being carried away by wind or precipitation.

No bag, bundle, container or receptacle set out for collection shall contain any nails, glass or other sharp objects in a manner as to potentially cause injury to collection personnel.

Needles and syringes eligible for collection shall be placed in securely sealed plastic or metal containers in such a manner that the needles cannot perforate the container.

Household clean ups, garage clean outs and similar activities do not create special exceptions to these Regulations. Where the Refuse exceeds the set out limits of this Section, private Refuse collection must be used to remove the Refuse. Refuse that is placed for set out in excess of these limits shall be deemed litter and subject to penalties pursuant to The Philadelphia Code.

1.4 Collection Days, Set Out Times, and Placement of Refuse:

1.4.1 Collection days will be regularly scheduled and announced from time to time by the Department of Streets. Affected residents and businesses will be notified in advance of changes in collection schedules.

1.4.2 Set Out Times

Summer Schedule. April 1 through October 31. When collections are made during the day, Refuse collected pursuant to these regulations must be placed on the sidewalk adjacent to the curb at the front of the Premises before 7:00 AM on the day of collection but not before 7:00 PM on the previous day in all areas of the City other than Center City. In Center City, the set out times are before 6:00 AM on the day of collection but not before 8:00 PM on the previous day.

Winter Schedule. November 1 through March 31. When collections are made during the day, Refuse collected pursuant to these regulations must be placed on the sidewalk adjacent to the curb at the front of the Premises before 7:00 AM on the day of collection, but not before 5:00 PM on the previous day in all areas of the city other than Center City. In Center City, the set out times are before 6:00 AM on the day of collection, but not before 6:00 PM on the previous day.

1.4.3 Any Refuse set out at times other than those allowed is considered to be litter within the meaning of The Philadelphia Code, even if it is in the proper location for collection and it is in a receptacle, container or bag authorized by these regulations.

1.4.4 Refuse shall not be placed in any location for collection other than the front of the Premises, such as the rear of the Premises or in a private driveway, unless specifically permitted by the Department of Streets.

1.4.5 No person shall place any Refuse for collection on any Private Premises without the permission of the owner or occupant of such Private Premises.

1.5 Special Materials:

Certain items are collected separately from Recyclable Materials and Collectible Rubbish or have special rules. The Streets Commissioner will establish and announce collection schedules for special collections as warranted. Additional rules relating to special collection items are listed below:

Bulk Items. Bulk Items may not be set out for curbside collection; they are only collected at drop off centers.

Christmas Trees. All nails, metal stands, ornaments, and other decorations shall be removed from the tree prior to taking the tree to a drop off center.

Tires. All tires shall be free of their rims and shall contain no other materials. Tires may not be set out for curbside collection; they are only collected at drop off centers or at other locations specially designated by the Streets Commissioner.

Yard Waste. Tree and brush cuttings shall be cut in pieces small enough to fit in a receptacle for set out. Yard Waste can be set out for regular collection with Collectible Rubbish or taken to a drop-off center, as described in Section 3, and may also be specially collected from time to time as determined by the Streets Commissioner.

Leaves. During special leaf collection events as designated by the Streets Commissioner, the following rules apply. Leaves shall be set out for collection in securely fastened, recyclable paper Yard Waste/leaf bags or covered containers or as otherwise directed by the Streets Commissioner. No one receptacle shall exceed 40 pounds in weight when filled. There is no limit to the number of receptacles of leaves that can be set out for the duration of the event. Leaves must be set out separately from any other material. Plastic bags may not be used for leaf set-out.

Mattresses and Box Springs. Mattresses and box springs shall be fully encased within a sealed, plastic bag.

Household Hazardous Waste. From time to time the Streets Commissioner will designate drop off locations for Household Hazardous Waste. At that time, the collection locations and the type of wastes to be collected will be determined and announced.

1.6 Premises Eligible for City Refuse and Recycling Collection:

1.6.1 Private Premises Generally. A Private Premises is eligible for City collection if it meets the following criteria:

It is inhabited;

It is a separate real estate parcel;

It has no more than six (6) units;

It is not listed in subsection 1.6.3 below; and

More Collectible Rubbish than meets the set out limits set forth in Sections 2 and 3 is not generated at the Premises on a regular basis.

1.6.2 Large Condominiums and Cooperatives. Condominiums and cooperatives larger than six units ("large condominiums and cooperatives") are eligible for City collection in accordance with the requirements of the Streets Department. These requirements include the regulations of this Section and such policies as may be issued by the Streets Commissioner from time to time. Such policies shall be posted on the City's web site and be available upon request from the Streets Department.

Large condominiums and cooperatives shall complete the application process specified by the Streets Department.

A Site inspection by the Streets Department will determine type of service (dumpster versus curbside collection) and method/location of collection.

If dumpsters are required, the large condominium or cooperative shall provide licensed dumpsters no more than four cubic yards in size and suitable for rear loading pick-up. Dumpster specifications are available on request from the Streets Department. The Streets Department will not pick-up dumpsters that are identified as belonging to a private collection/disposal company.

Large condominiums and cooperatives that are permitted to set out cans and bags are subject to the size and weight restrictions in Section 3, but are not subject to the quantity limits of that Section.

The City's frequency of pick-up is once per week.

Large condominiums and cooperatives shall recycle in accordance with Section 2.

Large condominiums and cooperatives may have private collection in addition to City service.

Large condominiums and cooperatives shall provide the City with a right of entry and a damage waiver for collection purposes.

1.6.3 Ineligible Premises. The following are not eligible for City collection.

Manufacturers, i.e., anyone who sells articles or products made or produced by them, including the production lines of manufacturers and their administrative offices.

Wholesalers, i.e., anyone who sells articles to a purchaser who retails or resells them, including the warehouse and repackaging operations of wholesalers and their administrative offices.

The production lines and the warehouse and repackaging operations of establishments which are part manufacturing and part wholesale and their administrative offices.

Gas stations, service stations, body shops, automotive repair shops, and similar facilities.

Any building with more than six (6) dwelling units, unless it is a large condominium or cooperative that meets the requirements of this Section.

Any Private Premises which receives private collection, unless eligible for fee exempt collection as described in Section 7.2 of this Regulation.

1.6.4 Refuse Must Be Set Out Where Generated. Refuse set out for an eligible Premises for collection must be generated by that eligible Premises. No Refuse will be collected if it is set out at an eligible Premises but was generated elsewhere.

1.6.5 Authorization To Refrain From Collection. City Collection personnel are authorized to refrain from collecting any Refuse not properly separated and set out according to these Regulations or from Premises not eligible for City Refuse collection.

1.6.6 Private Collection Required. Private collection must be arranged for any Premises or material not eligible for City collection.

1.7 Fee for Neighborhood Sanitation and Cleaning Services:

1.7.1 All Premises eligible for City collection pursuant to these regulations shall be presumed to receive City collection service and related cleaning services and, except as provided in Subsection 2 below, the owners of such properties shall be required to pay an annual fee of $300 for neighborhood sanitation and cleaning services, unless the requirements of Subsection 6. below are met.

1.7.2 The following are exempt from the fee:

Collection from single-family dwellings;

Collection from condominiums and cooperatives, as defined in Philadelphia Code Section 10-717.1(1); and

Collection from owner-occupied multi-unit properties used solely for residential purposes where no unit is rented or leased for financial consideration.

1.7.3 City collection from the Premises at which the fee is charged shall be subject to the set out limits and other restrictions otherwise set forth in these regulations, and shall include collection of Recyclable Materials under such restrictions.

1.7.4 The City shall send an Invoice for the service fee to each known property subject to the fee. Payment shall be due 60 days after the date of the Invoice. An Invoice, also due within 60 days, shall also be sent promptly upon the Department's learning of a property not yet billed.

1.7.5 An owner of property that has not received City service, but that is eligible for service, may, during the course of a service year, notify the City of the need for City service. If, at the time service begins, less than half of the then current six-month billing period has elapsed, the property shall receive the Invoice for that full period; if more, the property will be billed starting with the Invoice for the next period.

1.7.6 An owner of property that demonstrates to the Department, pursuant to the requirements of these Regulations, that it has in place private waste hauling service, or another lawful waste disposal alternative that the Department determines is reasonably likely to fulfill the waste disposal needs of the establishment, shall be exempt from the annual fee. Such a demonstration may be made by providing the Department, through its website: (a) identification of the property, including the address; (b) the name of the private hauler that is providing private collection service; (c) the account or other identifying number used in connection with the account with the private hauler; and (d) identification of the provider of the information.

1.7.7 A property owner shall have 60 days from the date of the Invoice to demonstrate that private waste hauling service is in place for the property. Failure to demonstrate that private service is in place shall constitute acceptance of City service and make the property owner responsible for the full annual fee.

1.7.8 The provision of false information to the City in an effort to demonstrate private service when no such private service is in place (a) constitutes a violation of The Philadelphia Code that subjects the property owner to penalties as set forth in the Code; and (b) makes the property owner liable for the annual fee.

1.7.9 If an Invoice remains unpaid 30 days after it is due, the Department shall immediately terminate service to the property and the property owner shall be liable for interest and penalties in the following amounts:

no interest for the first month after the due date, and interest at the rate of one percent (1%) of the amount of the unpaid fee each month or fraction thereof thereafter during which the fee remains unpaid; and

no penalty for the first month after the due date, and penalty calculated on the amount of the unpaid fee at the following rates for each month thereafter during which the fee remains unpaid:

in the first month or fraction thereof, one percent (1%);

in the second month or fraction thereof, an additional one percent (1%) for a total of two percent (2%);

in the third month or fraction thereof, an additional one percent (1%) for a total of three percent (3%);

in the fourth month or fraction thereof, an additional two percent (2%) for a total of five percent (5%);

in the fifth month or fraction thereof, an additional two percent (2%) for a total of seven percent (7%);

in the sixth month or fraction thereof, an additional two percent (2%) for a total of nine percent (9%);

in the seventh month or fraction thereof, an additional three percent (3%) for a total of twelve percent (12%);

in the eighth month or fraction thereof, an additional three percent (3%) for a total of fifteen percent (15%);

in the ninth month or fraction thereof, an additional three percent (3%) for a total of eighteen percent (18%);

in the tenth month or fraction thereof, an additional four percent (4%) for a total of twenty-two percent (22%);

in the eleventh month or fraction thereof, an additional four percent (4%) for a total of twenty-six percent (26%);

in the twelfth month or fraction thereof, an additional four percent (4%) for a total of thirty percent (30%);

thereafter, for each additional month or fraction thereof, one and one-quarter percent (1 1/4%) shall be added to the amount charged under subsection (xii).

When suit is brought for the recovery of the fee, the person liable therefor shall, in addition, be liable for the costs of collection together with the interest and penalties herein imposed.

1.7.10 A claim against the property owner for unpaid liability may be filed as a lien against the subject Premises.

1.7.11 For any property at which service has been terminated for lack of payment, collection services shall not be resumed until all outstanding balances are paid, including any balances for unpaid fees for prior years.

1.7.12 If the City has terminated service and private collection service has not been demonstrated pursuant to the requirements of Subsection 6 above, it shall be presumed that the owner and/or user of the Premises is engaged in an unlawful manner of waste disposal and is causing a public nuisance, which shall subject the owner of the Premises to an administrative order to cease operations, as may be permitted by law.

1.7.13 If Collectible Rubbish or Recycling Materials are set out for City collection at any ineligible Premises as described in Section 6 above, or at any Premises where City service has been terminated pursuant to these Regulations, the property owner shall be subject to all applicable provisions and penalties of The Philadelphia Code and regulations adopted thereunder pertaining to the improper set out of Refuse. The Department may issue notice of violation in accordance with the procedures set forth in Section 10-718 of The Philadelphia Code. Penalties for improperly setting out Collectible Rubbish or Recycling Materials shall be as specified in Section 10 of these Regulations.

1.8 Miscellaneous:

1.8.1 Placement of Private Business Litter Receptacles. Philadelphia Code Section 10-704 requires "… the placement of private business receptacles at all public entrances to places of business which prepare or sell food for takeout or consumption off the Premises during the business' normal hours of operation only."

Such businesses shall place a Private Business Litter Receptacle at all public entrances, outside of the Premises, during all hours they are open or in operation.

Such businesses shall store the Private Business Litter Receptacles inside the Premises during hours the business is not open or in operation.

Any business receiving private Refuse collection must also use that collection to dispose of Refuse placed in a Private Business Litter Receptacle used by the business.

1.8.2 Authorized Private Receptacles. Philadelphia Code Section 10-713 states that "No person shall throw or deposit litter on any Private Premises, whether or not owned by such person, except that the owner or person in control of Private Premises may maintain authorized private receptacles for deposit or collection of litter."

For the purposes of Code Section 10-713, an authorized private receptacle for the purpose of storage of refuse on Private Premises shall mean a metal or other non-corrodible receptacle having a tight-fitting lid or cover. Any refuse on a Private Premises which is not stored in such manner is considered litter subject to the provisions and penalties of the Philadelphia Code.

Bags and open containers shall not be considered authorized private receptacles for the purposes of Philadelphia Code Section 10-713

1.8.3 Private Compensation Prohibited. No person shall give any City collection personnel any monetary compensation, gift, or reward for the performance of his or her duties nor shall any Streets Department employee take any such monetary compensation, gift, or reward for the performance of his or her duties.

1.8.4 Use of Public Receptacles. No person shall place or deposit household or commercial Refuse in any Public Receptacle.

1.9 Pilots and New Programs:

1.9.1 From time to time, the Streets Department may initiate a pilot program to test different Refuse collection methods, or implement new programs, which affect only a certain portion of the City. For purposes of either a test pilot program or implementation of a new program, the Streets Commissioner may promulgate policies or regulations at variance with these Regulations. In such a case, the specific policies or regulations for the pilot program or new program, where different from these Regulations, supersede these Regulations for the section of the City affected by the program.

1.9.2 Affected residents and businesses will be notified by phone message, regular mail or another appropriate method of communication.

1.10 Penalties and Enforcement:

1.10.1 A violation of these Regulations shall be punishable by a fine of not less than one hundred dollars ($100) and not more than three hundred dollars ($300), and each day a violation continues or is permitted to continue shall constitute a separate violation for which a separate penalty may be imposed. Notices of violation may be issued in accordance with the procedures set forth in Section 10-718 of The Philadelphia Code.

1.10.2 An owner of a Premises is responsible for a violation of these Regulations occurring at such Premises, even if a tenant or occupant of the owner's Premises created or caused the violation, although such tenant or occupant of the owner's Premises may also be held liable for such violation.

1.10.3 Any person who receives a notice of violation of any provision of these Regulations, or any provision of the Code related to the generation or placement of Refuse for which the Code Violation Notice amount is $50, may settle the matter by admitting the violation, waiving the right to a hearing, and paying the following settlement amount:

When Payment Is Made	Settlement Amount
Within ten (10) days of receiving the notice of violation:	$50.00
Beginning on the eleventh (11th) day after receiving the notice of violation through ten (10) days after receiving a first reminder notice that no payment has been received:	$75.00
Beginning on the eleventh (11th) day after receiving the first reminder notice through ten (10) days after receiving a second reminder notice that no payment has been received:	$90.00
After an enforcement complaint has been filed in Municipal Court, but before a Municipal Court hearing has been held	$90.00 plus Municipal Court filing fees

1.10.4 The notice of violation shall contain an appropriate statement for signature by the person receiving the notice of violation for the purpose of admitting the violation and waiving a

hearing, and shall be returned when the person receiving the notice of violation remits the stipulated settlement payment.

1.10.5 Any person who receives a notice of violation may contest the violation by writing to the Office of Administrative Review and requesting a hearing. The notice of violation shall contain instructions regarding the ability to contest a notice of violation and shall include the address of the Office of Administrative Review.

1.10.6 If a person who receives a notice of violation fails to either make the settlement payment described in Section 9.3 above after receipt of the second reminder notice or have the violation dismissed after a hearing before the Office of Administrative Review, a complaint shall be filed for such violation in Philadelphia Municipal Court. If the person named in the complaint is found to be liable for the violation or fails to appear on the date set for hearing, he or she shall be subject to the imposition of fines in the amount of no more than Three Hundred Dollars ($300.00) per violation.

Chapter 2: Regulations for the Provision of Waste and Recycling Receptacles by Takeout Food Establishments:

2.1 Authority.

These Regulations Governing Provision of Waste and Recycling Receptacles By Takeout Food Establishments ("Regulations") are promulgated pursuant to Sections 5-500 and 8-407 of The Philadelphia Home Rule Charter and Section 10-704 of The Philadelphia Code.

2.2 Definitions.

In these Regulations, the following definitions shall apply:

Alternative Receptacle: A Waste Receptacle or Recycling Receptacle serving one or more Regulated Businesses that is provided as part of a commercial corridor litter plan approved by the Department;

Commissioner: The Streets Commissioner and designees;

Department: The Department of Streets of the City of Philadelphia;

Recyclable Material: Material designated by the Department as commercially recyclable, including glass and plastic bottles, cans, newspapers, cardboard, and plastic containers;

Recycling Receptacle: A container with markings designating its use for placement of Recyclable Materials with a capacity of at least 24 gallons, but no more than 32 gallons and that has a lid with either an opening for depositing recyclable material or a lid that can be lifted by a user.

Regulated Business: A business which sells prepared or prepackaged food for takeout or consumption off the premises;

Right-of-Way: City streets, sidewalks and the surface of and space above and below any real property in the City in which the City has a regulatory interest, or interest as a trustee for the public, as more fully described in Section 11-701(1)(dd) of the Philadelphia Code;

and

Waste Receptacle: A container with markings designating its use for placement of litter or waste that is not Recyclable Material with a capacity of at least 24 gallons, but no more than 32 gallons, and that has a lid with either an opening for depositing trash or a lid that can be lifted by a user.

2.3 Scope of Regulations

These Regulations apply to the provision and maintenance of Waste Receptacles and Recycling Receptacles under Section 10-704(2) of The Philadelphia Code.

2.4 Requirements for Regulated Businesses

Every Regulated Business shall provide and maintain a Waste Receptacle and a Recycling Receptacle in accordance with this Section unless an Alternative Receptacle has been approved by the Department:

Waste Receptacles and Recycling Receptacles must be placed within ten (10) feet of the main entrance of the building on the exterior of the building;

Waste Receptacles and Recycling Receptacles may be placed in the Right-of-Way pending location approval by the Department. If locked to a piece of public infrastructure (street sign, street pole, utility pole), the business owner or employees must be able to access the key during business hours. The receptacles may be taken inside when the business is closed or secured with a cable or thin metal chain that can be cut by the Department or other utility agency needing access to the infrastructure;

Waste Receptacles and Recycling Receptacles must be maintained in good condition, without cracks, leaks or other damage; the exterior of the receptacles must be kept clean; and the receptacles must be maintained free of odors.

The Regulated Business is responsible for emptying the receptacles to ensure that they are not overflowing;

The Regulated Business is responsible for disposal of the waste and recycling collected using the Regulated Businesses' regular waste disposal and recycling methods. If the Regulated Business uses a private disposal service it must use a private disposal service for the Waste Receptacles and Recycling Receptacles;

Waste Receptacles and Recycling Receptacles shall comply with standards for Waste Receptacles and Recycling Receptacles established by a Business Improvement District or Special Services District that provides services in the district; and

Waste Receptacles and Recycling Receptacles may only be used to collect customer waste and recycling and not waste and recycling generated by other business operations.

2.5 Responsibility for Injuries to Persons or Property.

Injury to any person or damage to any property resulting from or by the placement of a Waste Receptacle or Recycling Receptacle pursuant to these regulations shall be the exclusive responsibility of the Regulated Business or its waste hauler; the City shall not be responsible or liable for any such injury or damage.

2.6 Effective Date.

These Regulations shall be effective immediately upon certification by the Records Department that it has been finally adopted pursuant to the procedures required by Section 8-407 of the Philadelphia Home Rule Charter.

TITLE II HIGHWAY REGULATIONS

Chapter 1: The Complete Streets Policy

1.1 Complete Streets:

Pursuant to Section 11-901 of the Philadelphia Code, the Department of Streets adopts the Complete Streets policy, as contained in the Philadelphia Complete Streets Design Handbook, as an integral part of its planning and programming wherever practicable.

The Department adopts the current edition of the Project Review Checklists contained in the appendix of the Complete Streets Design Handbook, which is available for review on the City's website.

Any construction project of a type set forth in Section 11-901(2) shall submit to the Department, a completed Project Review checklist.

Checklists shall be public records and shall be posted on the City's website within sixty (60) days of filing.

Chapter 2: Regulations Governing Street Openings, Excavations and Restoration

2.1 Street Openings:

2.1.1. Authority.

These Regulations Governing Street Openings, Excavations and Restoration ("Regulations") are promulgated pursuant to Section 5-501 of The Philadelphia

Home Rule Charter and Title 11 of The Philadelphia Code.

2.1.2 Definitions

In these Regulations, the following definitions shall apply.

Applicant: The person or agency submitting an application for any permit addressed by these Regulations, and agreeing to the requirements herein;

City: The City of Philadelphia acting as a municipal government;

Commissoner: The Streets Commissioner and designees;

Department: The Streets Department of the City of Philadelphia;

Developer: A private party for whom multiple Applicants or Permittees may be contracted to perform work as part of a larger development within the Right-of-Way;

Emergency or Emergency Condition: A condition that, in the judgment of the Commissioner, constitutes an imminent risk of health, welfare, or safety of the public, or has caused or is likely to cause Facilities already installed to be unusable and result in loss of the services provided through the Facilities;

Facility: Conduit, pipes, cables, wires, lines, towers, optic fiber, antennae poles, associated equipment and appurtenances, and any other facilities (exclusive of water service pipes and sewer laterals in plumber's ditches and end user devices) located in the right of-Way and designed, constructed, and/or used, by telecommunications providers, cable serviceand open video system service providers, information service providers, public utilities, or other persons for transmitting, transporting, or distributing communications, telecommunications, electricity, natural gas or manufactured gas, oil, gasoline, steam, water, waste water, or any other form of energy, signal or substance;

Guaranteed Pavement Information System ("GPIS"): The online permitting system developed for and used by the Department in connection with the Department's street opening permit process. Through GPIS, information is also exchanged between Facility owners and the City relating to construction, projects and events which may affect City Rights-Of-Way

Historic Street: Any Roadway Block listed on the Philadelphia Historic Street Paving Thematic District Inventory, as may be updated from time to time by the Department;

Municipal Radio: The communications division of the City's Office of Innovation and Technology ("OIT") that provides communications between City agencies on a round the clock basis. Municipal Radio operators receive calls and dispatch to other agencies in accordance with City protocols for emergency situations;

New Facility in an Existing Location: Work involving the installation of a new Facility on

top of, underneath, or alongside an existing Facility where the existing Facility is not being abandoned and physically removed. The new Facility will increase the total footage for purposes of calculating the Facility owner's Right-of-Way related fees. This type of project is entered into GPIS as a "Tier I or Tier II" project as defined in Section 5 and Section 6 of these Regulations;

PennDOT: Pennsylvania Department of Transportation;

Permittee: The person or agency to whom a permit has been issued;

Private Paving: All work performed by any private entity within the public Right-of-Way that results in the restoration or construction of any curb, sidewalk, roadway pavements, and associated Facilities and Structures as may be permitted within the public Right- of-Way pursuant to the Philadelphia Code, or an act of City Council

Right-of-Way: The surface of, and space above and below, any real property in the City in which the City has a regulatory interest, or interest as a trustee forpublic, as more fully described in Section 11-701(1)(dd) of the Philadelphia Code;

Right-of-Way Unit: The Department unit responsible for regulation of the Right-of-Way;

Roadway Block: That area of the roadway between a street's curb line and bounded at either end of the block by the intersecting street's center line, as defined by Department's Geographic Information System ("GIS") Centerline data;

Same Size in the Same Location: Work involving the replacement of an existing Facility with a new Facility that is substantially identical in size and shape to the original Facility;

Service Connection: The type of work involving a Facility that will be installed starting from an existing Facility (through a main, duct, manhole, pole, etc.) and ending at a customer service connection;

Street Occupancy Permit: A permit issued by the Department to a contractor or agency, authorizing the temporary (partial or full) closure of the Right-of-Way, including the roadway and/or footway, for the temporary placement of equipment necessary to perform work. These permits are also commonly known as "Street Closure" or "Lane Closure" permits;

Street Opening Permit: The permit required by the Philadelphia Code and/or Department Regulations and issued by the Department to open or excavate within the City Right-Of-Way;

Structure: Utility maintenance hole covers (manholes), castings, vaults and other infrastructure breaking the surface of any portion of the Right-of-Way including their underground supports and foundation;

Substantial Improvement: Reconstruction, rehabilitation, addition, or other improvement of a Structure, the cost of which equals or exceeds Fifty percent (50%) of the market value of the Structure before the "start of construction" of the improvement; and

Water Department: The Philadelphia Water Department.

2.1.3 Permit Required.

2.1.3.1 Proof of Permit. Persons in charge of construction work on City streets shall have in their possession, at all times while so engaged, a permit, issued by the Department, authorizing the work.

2.1.3.2 Violation of Regulations. Failure at any time to fully and faithfully comply with these Regulations, and such further regulations as the Department may from time to time promulgate, or to pay promptly such expenses as herein required, shall immediately operate as a forfeiture of permits issued, and debar the Permittee from receiving any further permits until released by action of the Department. If any work or precaution necessary to protect the public in the use of the streets is omitted or imperfectly performed by the Permittee, the Department shall serve a formal notice on the responsible Permittee, and immediately cause the necessary corrective work to be performed at Permittee's expense.

2.1.3.3 Repeated Violations. The Department may refuse to issue permits to any Applicant who has violated these Regulations and, after notification by the Department, failed to comply with its requirements.

2.1.3.4 Period of Validity of Permit. Permits shall be valid for a period of twelve (12) months from the date of issuance by the Department, unless a shorter period is indicated on the permit.

2.1.4 Method of Making Application.

2.1.4.1 Application. Applicants seeking permission for the opening and structural occupancy of a street in the City of Philadelphia shall file with the Department:

A written application indicating the full name and business address of the Applicant, and a statement of the character and purpose of the proposed work;

An electronic submittal showing the complete details of the proposed work and indicating the character and location of all adjacent, existing Facilities and Structures; and

a summary of such other information as may be necessary to enable the Commissioner to reach a full and definite understanding of the entire project.

2.1.4.2 Alteration of Application. After the Department has approved the application and issued the permit, the terms, conditions or intent of the application, and the accompanying drawings shall not subsequently be altered or departed from without the prior written consent of the Commissioner; except in cases of Emergency, the Department may authorize modifications when necessary.

2.1.4.3 Prerequisites for the Issuance of a Permit. No permit will be issued until the Applicant has met all requirements of the Department as identified in the permit application**.**

2.1.5 Street Opening and Street Occupancy Permits: Tier I.

2.1.5.1 Tier I. The following activities shall require Tier I Permits:

Installation of any new Facility in a new location where the total linear footage of excavation is less than sixty feet (60');

Installation of any New Facility in an Existing Location where the total linear footage of excavation is less than sixty feet (60');

Installation of any Service Connection perpendicular to the road, where the total linear footage of excavation is less than sixty feet (60');

Installation of any Service Connection requiring an "L" shaped excavation, where one side is less than sixty linear feet (60'), the other side less than two-hundred fifty linear feet (250');

Replacement of an existing Service Connection of the Same Size in the Same Location, where the excavation is less than two-hundred fifty linear feet (250'); and

Manhole or vault roof and casting repair and replacement where the extent of the work includes only repairing or replacing the roof. All other repairs (except lid and frame replacement) require Tier II applications.

2.1.5.2 Application Process. Applicants for Tier I Permits shall complete all requirements of this Section.

2.1.5.3 PA One Call. Applicant shall contact the PA One Call system requesting that any Facility owner having Facilities in the proposed location provide information regarding the location of existing Facilities. In accordance with PA Act 287 as amended, a Facility owner must "initially respond not more than ten working days after receipt of a request from a designer who identifies the site of excavation or demolition work for which he is preparing a drawing." Applicant shall complete all PA One Call requirements during design and construction.

2.1.5.4 GPIS.

2.1.5.4.1 The Applicant shall submit electronically the following documents to GPIS.Apps@phila.gov for review:

a drawing containing the information required by PA One Call;

utility clearance transmittal; and

PA One Call response ticket

2.1.5.4.2 The Department may require that certain documentation be sent directly to reviewing units, departments and agencies.

2.1.5.4.3 For work on Historic Streets, the City of Philadelphia Historic Commission will review the location and respond directly to GPIS with instructions to ensure roadway and/or footway are restored with the existing or other approved materials.

2.1.5.4.4 For work on State Routes within the roadway from curb line to curb line, PennDOT will review the location and respond directly to GPIS.

2.1.5.4.5 For work with porous pavement streets, the Water Department will review the location and respond directly to GPIS with instructions to ensure the functionality of the porous pavement system.

2.1.5.5 Tier I Plan Standards. The plans for a Tier I Street Opening Permit must comply with the following standards:

Must be clearly drawn but need not be prepared in Auto-CAD or drawn to scale;

Other utilities Facilities do not need to be shown;

Must show dimension lines containing all information required by PA One Call and GPIS input;

Must show conduit or main size and depth (cover);

Must use different linetypes or lineweights for existing facilities/conditions and proposed work, clearly showing what is proposed;

Must show the existing facility into which proposed work will connect;

Must adequately show cover or depth by:

Showing the existing Facilitiy and proposed work in the cross-section; or
Labeling the plan to show cover. The plan should clearly show where the cross-section is from. If depth changes when work is done, the application must be updated with a drawn cross-section showing new depth.

Where Service Connections are present, the plan must show the address the Service Connection will be servicing.

Must contain a title block with the following information:

Utility Name;
GPIS Application Number;
PA One Call Number;
Project Name;
Date; and
Person who prepared the plan;

Must contain a North arrow;

Must show street names; and

Duct-bank plans do not need to show the number of sub-ducts that will be occupied; however, the plans must indicate the type and dimensions of the duct-banks as well as the number of sub-ducts the duct-bank can hold.

2.1.5.6 Required Tier I Representations. Prior to issuance of a Street Opening Permit; the Applicant shall affirm, by checking a box within GPIS, that the Applicant:

has completed the PA One Call process to ensure utility clearance and resolution of any utility conflicts;

has reviewed, and agrees to comply with all reasonable establishedindustry standards, and all promulgated policies and regulations, governing the interaction between existing Facilities in the proposed location, and the new Facilities;

has reviewed, and agrees to comply with all City of Philadelphia and PennDOT standards regarding the repaving and backfill of the street after excavation;

agrees to comply with all state, federal, or national standards applicable to its company and construction and restoration relating to clearance/separation between utility lines, pipes or other Facility;

is currently compliant with the insurance requirements of Section 11-701(2)(d)(.l) of the Philadelphia Code; and

has affirmed the indemnification obligations to the City set forth in Section 11-701(2)(d)(.2) of the Philadelphia Code.

2.1.5.7 Street Occupancy Permit Applications. Applicants may simultaneously submit, to the Department, all required Street Occupancy Permit applications and Street Opening Permit applications.

2.1.5.8 Street Opening Permit Timeline. The Department typically will review submissions within two (2) business days of receiving the Tier I Street Opening

Permit application and will indicate whether the application is complete or if additional information is required.

The Department will advise the Applicant by e-mail and/or by GPIS if the application is incomplete or additional information is required;

If the application is complete, the Department will grant or deny the permit and plans within five (5) business days from the submission date;

If additional information is required, the Department will approve or deny the permit and plans within five (5) business days from the date the required additional information is received. The review time period will commence upon receipt of the required information;

On resubmission, the Applicant shall notify the Department of the resubmission of the required additional information.

2.1.5.9 Committee of Highway Supervisors Approval. Tier I projects do not require Committee of Highway Supervisors approval.

2.1.6 Street Opening and Street Occupancy Permits: Tier II.

2.1.6.1 Tier II. The following activities shall require Tier II Permits:

Installation of any new facility in a new location where the total linear footage of excavation is sixty feet (60') or longer;

Installation of any New Facility in an Existing location where the total linear footage of excavation is sixty feet (60') or longer;

Installation of any Service Connection perpendicular to the roadway, where the total linear footage of excavation is sixty feet (60') or longer;

Installation of any Service Connection requiring an "L" shaped excavation, where one side is sixty linear feet (60') or longer, or the other side is two-hundred fifty linear feet (250') or longer;

Installation of any Service Connection of the Same Size in the Same Location, of two-hundred fifty linear feet (250') or longer;

Manhole or vault wall repair and replacement;

Any activity not listed in a Tier I application category except:

(A) Manhole lid and frame replacements (require a Street Occupancy Permit);

(B) Service turn on/shut off (See 2.1.7 below); and

(C) Emergencies (See 4.1.11 below)

2.1.6.2 Application Process. Applicants for Tier II Permits shall complete all the requirements of this Section.

2.1.6.3 PA One Call. The Applicant shall contact the PA One Call system as a designer, requesting that any Facility owner having Facilities in the proposed location provide information with regard to the location of existing Facilities. In accordance with PA Act 287 as amended, a responding Facility owner shall "initially respond not more than ten working days after receipt of a request from a designer who identifies the site of excavation or demolition work for which he is preparing a drawing." Applicant shall complete all PA One Call requirements during design and construction.

2.1.6.4 GPIS

2.1.6.4.1 The Applicant shall submit electronically the following documents to GPIS.Apps@phila.gov for review:

a drawing containing the information required by PA One Call;

utility clearance transmittal; and

PA One Call response ticket;

2.1.6.4.2 The Department may require that certain documentation be sent directly to reviewing units, departments and agencies.

2.1.6.4.3 For work on Historic Streets, the City of Philadelphia Historical Commission will review the location and respond directly to GPIS with instructions to ensure that the roadway and/or footway are restored with the existing or other approved materials.

2.1.6.4.4 For work on State Routes within the roadway from curb line to curb line, PennDOT will review the location and respond directly to GPIS.

2.1.6.4.5 For work on porous pavement streets, the Water Department will review the location and respond directly to GPIS with instructions to ensure the functionality of the porous pavement system.

2.1.6.5 Tier II Plan Standards. The plans which must be submitted for a Tier II Street Opening Permit must comply with the following standards:

Must be clearly drawn and to scale;

Must show dimension lines containing all information required by PA One Call and GPIS input;

Must show all existing Structures and Facilities that either cross or within five feet (5') of the proposed work;

Must use different linetypes or lineweights for existing Facilities / conditions and proposed work, clearly showing what is proposed;

Must contain a legend showing linetypes and their meanings unless using City Standards;

Must include a cross-section showing existing Facilities, when crossing the Right-of-Way and when crossing intersection;

Plan and section must show conduit or main size and depth (cover);

Duct-bank plans do not need to show the number of sub-ducts being occupied; however, the plans must indicate the type and dimensions of the duct-banks as well as the number of sub-ducts the duct-bank can hold; (ix) Must contain a title block with the following information:

- Utility Name; GPIS Application Number;
- PA One Call Number;
- Project Name;
- Date; and
- Person who prepared the plan

Must contain a North arrow;

Must show street names.

2.1.6.6 Required Tier II Representations. Prior to issuance of any Street Opening Permit, the Applicant shall affirm, by checking a box within GPIS, that the Applicant:

has completed the PA One Call process to ensure utility clearance and resolution of any utility conflicts;

has reviewed and agrees to comply with all City of Philadelphia and PennDOT standards regarding the repaving and backfill of the street after excavation;

agrees to comply with all state, federal, or national standards applicable to its company and construction and restoration relating to clearance/separation between utility lines, pipes or other Facility;

is currently compliant with the insurance requirements of section - 701(2)(d)(.1) of the Philadelphia Code; and

affirms the indemnification obligations to the City set forth in section 11-701(2)(d)(.2) of the Philadelphia Code.

2.1.6.7 Highway Occupancy Permit Applications. Applicants may simultaneously submit to the Department all required Street Occupancy Permit applications and Street Opening Permit Applications.

2.1.6.8 Street Opening Permit Timeline. The Department typically will complete an initial review of submissions within five (5) business days of receiving the Tier II Street Opening Permit application and will indicate whether the application is complete or if additional 'information is required.

The Department will advise the Applicant by e-mail and/or by GPIS the application is incomplete or if additional information is required.

If the application is complete, the Department will grant or deny the permit and plans within twenty-five (25) business days from the submission date. If the application is complete, all affected Facility Owners are also expected to routinely grant or deny approval of the plans within the same twenty-five (25) day period.

If additional information is required, the Department will typically grant or deny the permit and plans within twenty-five (25) business days from the date the required additional information is received. The review time period will commence upon receipt of the required information.

On resubmission, the Applicant shall notify the Department of resubmission of the required additional information.

Upon receipt of approval of the plans by all affected Facility owners, the Department shall approve the permit within forty-eight (48) hours (excluding weekends and legal holidays).

2.1.7 Street Excavations to Turn On/Shut Off Service.

Self-Issuing Permits. An Applicant seeking to obtain a Street Opening Permit to turn on or shut off a Service Connection shall select "Turn On/Shut Off ' as the project type in GPIS and shall enter into GPIS the location and offset information for such project. Applicants may provide the PA One Call serial number (if available) for the project. Upon input of information into GPIS, the Applicant will be able to print a permit for the project directly from GPIS. No drawings or additional information are required. The information entered into GPIS relating to turning on or shutting off a Service Connection shall be used only for the City's record purposes, and shall not be used or included in determining the Facility owner's Right-of-Way related fees.

2.1.8 Street Occupancy Permit Procedure.

2.1.8.1 Street Occupancy Permit Application. A Facility owner (or its contractor) may request the closure of traffic lanes for utility work by submitting completed

Street Occupancy Permit application to the Department via facsimile or other approved method.

2.1.8.2 Timing. Applications must be submitted at least ten (10) days prior to the start of work.

2.1.8.3 Dual Permit Applications. Applicants may simultaneously submit applications to the Department for a Street Occupancy Permit and a Street Opening Permit.

All contractor identification information must be indicated on the application when submitting.

The Department will grant or deny any Street Occupancy Permit application within ten (10) days after the receipt of the completed submission.

If granted, the Street Occupancy Permit will remain in the system as pending until the Street Opening Permit is issued at which point the Street Occupancy Permit will also be issued.

Work must be initiated within ten (10) days of issuance of the Street Occupancy Permit or the permit will be revoked. A revoked Street Occupancy Permit may be reinstated for good cause upon request to the Department.

If a Street Occupancy Permit application was not submitted with a Street Opening Permit application, the Applicant shall send a copy of the Street Opening Permit with its application for the Street Occupancy Permit.

2.1.8.4 Police Assistance. Requirements for police assistance in conjunction with a Street Occupancy Permit shall be at the sole discretion of the Department.

2.1.9 Street Opening Requirements.

2.1.9.1 Safety Requirements. Before proceeding with the opening of a street, the area immediately adjacent to the work site shall be made safe with lights, barricades or other devices approved by the Department.

2.1.9.2 Traffic Regulations. All work shall be conducted in such a manner as to ensure the least possible disruption to pedestrian, bicycle, and vehicular traffic.

Temporary approaches to any crossings or intersecting Right-of-Ways shall be provided and kept in a safe condition, wherever required by the Department. On Right- of-Ways occupied by railway tracks, temporary approaches to the entrances and exits of railway cars shall, where necessary, be provided and maintained.

No Right-of-Way shall be closed to traffic unless a Street Occupancy Permit is obtained and a detour route is approved by the Department.

Every street closed to traffic shall be protected by effective barricades in accordance with an approved pedestrian protection plan and standard Streets Department signs, including detour signs, shall be placed as directed by the Department. All signage must be maintained by the Permittee for the duration of the closure.

2.1.9.3 Limitation of Operation. No more than five hundered linear feet (500') of Right-of-Way may be opened or obstructed to traffic at any time without the permission of the Department.

2.1.9.4 Accessibility of Right-of-Ways. The footways, gutters, inlets and portions of streets adjoining the work or in its vicinity shall be kept free of obstructions and debris to the greatest extent possible. Lawns or grass plots shall not be used for storage purposes. On improved streets, the materials, tools and equipment required in connection with the work shall be neatly and properly stored upon the footway at least one foot (1') back of the curbing and leaving at all times a space for pedestrians which shall be at least five feet (5') in width. If the required pedestrian space cannot be maintained, and/or if materials, tools and equipment must be stored in the street, a Street Occupancy Permit shall be obtained.

2.1.9.5 Excavated Material. Material removed from the street opening shall be piled in a location adjacent to the opening so that it does not interfere with vehicular and pedestrian traffic. Excavated materials in excess of the amount needed for backfill shall be removed daily and the street cleaned.

2.1.10 Permit Fees for Breaking Streets

2.1.10.1 Definitions.

Center City. Means the area bounded by Spring Garden Street, the Delaware River, South Street, and the Schuylkill River, including all parts of the boundary streets.

University City. Means the area bounded by the Schuylkill River to the east, Spring Garden Street from the Schuylkill River to 40th Street, 40th Street from Spring Garden to Powelton Avenue, Powelton Avenue from 40th Street to Market Street, Market Street from Powelton Avenue to 50th Street, 50th Street from Market Street to Springfield Avenue, Springfield Avenue from 50th Street to 49th Street, 49th Street from Springfield Avenue to Woodland Avenue, Woodland Avenue from 4gth Street to 45th Street, 45th Street from Woodland Avenue extended to the Schuylkill River, including all parts of the boundary streets.

2.1.10.2 Permit Fees for Breaking Streets and Footways Under Code Section 11-203. Fees for permits for breaking streets and footways pursuant to section 11-

203(7) of the Code are as follows:

Paved Street - $550 for the first two square yards plus $145 for each additional square yard or portion thereof.
Unpaved Street - $50 per opening

Footway - $25 per opening

2.1.11 Emergencies.

2.1.11.1 Emergency Reporting Procedures. Any Facility owner (or its contractor) performing Emergency work which requires immediate excavation in the street or closure of traffic lanes shall comply with the reporting procedures below.

The Permittee shall immediately call Municipal Radio at (215) 686-4514 upon arrival at the site of an Emergency. The Municipal Radio operator shall report the Emergency to traffic police, fire, PennDOT and SEPTA, where needed.

Facility owner (or its contractor) shall provide the following information to the Municipal Radio operator:

Company Name with Identifier;
Name and telephone number of the person calling;
Nature of the emergency;
Whether utility service has been disrupted;
Type of Call:

Original

Extension of time

Excavation required?

Yes

No

Street Closure required?

Full

Partial

None

duration of work (provide the number of hours expected to resolve.the emergency);
Location of work (provide the incident address or the hundred block);

Each Facility owner shall also provide the Department with the phone number of its primary office responsible for such work. In the case of a declared emergency,

the contact person will be the Facility owner's designated representative working with the City's Emergency Operations Center ("EOC") and may be contacted through EOC.

Each Facility Owner shall make an additional call to Municipal Radio if their work crew remains at the site longer than was initially reported in the original notification.

2.1.11.2 Emergency Utility Notification Number ("EUN"). The Municipal Radio operator will generate and provide the Facility owner (or its contractor) with an Emergency Utility Notification ("EUN") number.

2.1.11.3 Emergencies Requiring Excavation. If the Emergency requires excavation in the street, the following additional procedures shall be followed:

Facility owner (or its contractor) shall provide the Municipal Radio operator with the following additional information:

Size of excavation (Length, Width, and Depth);

Curb Offsets;

The Facility owner shall enter the EUN number into GPIS upon receipt of the Emergency Permit. Within seven (7) days of completion of the emergency-related excavation, the Facility owner shall enter the required information into GPIS, using the EUN number provided by Municipal Radio and/or the Department.

2.1.11.4 Use of Emergency Information. The information inputted into GPIS in connection with emergencies shall be used only for the City's record purposes, and shall not be used or included in determining the Facility owner's Right-of-Way related fees.

2.1.12 Trench Standards, Steel Plate Procedures, Backfilling.

2.1.12.1 Trench Standards. All Permittees shall adhere to the following:

All applications and all work and restorations of trenches or other openings must comply with Department trench standards for both Permanent (L-901.+-and Temporary (L-902) Trench Restoration .

All plating and decking installed by the Permittee shall be made safe for and adequately support vehicles and/or pedestrian use. The size of the plate or decking shall be large enough to span the opening, be firmly placed to prevent rocking and shall overlap the edges of trenches and openings. Trenches and openings must be sufficiently ramped with cold patch or concrete to ensure smooth riding and safe conditions.

All plating and decking shall be fastened by pining, countersinking or other Department-approved method to prevent movement. Steel plates shall be pinned

in each corner with a smooth headed pin that does not protrude above the plate more than one half (0.5”) inch. The pins must extend into the street surface at least three inches (3").

Where deflections are more than 3/4", heavier sections of plates or decking or intermediate supports shall be installed. Plates must extend at least twelve (12”) inches beyond the edge of the excavation in all directions. The plate must be ramped with asphalt at least six (6") inches wide of the owner.

All steel plates or decking shall be permanently labeled with the identity of the owner.

The Permittee shall provide the Department with an emergency telephone number prior to placing any steel plating or decking.

2.1.12.2 Removal. The Permittee shall remove and/or restore any dislodged steel plating or decking to a safe condition within six (6) hours of receiving notice from the City.

In the event it becomes necessary for the City to restore, adjust or remove any steel plating or decking, the Permittee shall reimburse the City for all costs.

Plating and decking must be removed immediately upon completion of permanent restoration.

2.1.12.3 Extended Use. Any steel plate or decking remaining in the Right-of-Way for more than seventy-two (72) hours must be reported to:

the Department Monday through Friday from 8:00 AM to 5:00;

Municipal Radio at all other times, with a request that the operator also notify Department.

2.1.12.4 Backfilling of Trenches and Other Openings. Ditches and other street openings shall not be backfilled until all tests required by the various utility companies and/or the Waterr Department are completed.

Trenches and other openings shall be carefully backfilled with materials approved by the Streets Department, consisting of earth, loam, sandy clay, sand and gravel or other approved materials, free from large clods of earth or stones, deposited in six-inch (6") layers.

Water, sewer, gas, steam, oil or other pipes must be appropriately supported. Each layer of fill shall be thoroughly compacted by rolling, tamping with mechanical rammers, or by hand tamping with heavy iron tampers. The tamping face area shall not exceed twenty-five square inches (25"). Each layer must be compacted to a density at least equal to that of the surrounding earth so that paving of the area can proceed immediately after the backfilling is completed.

Care shall be taken to not damage the anti-corrosion coating applied to water, sewer, gas, steam, oil or other pipes.

Upon completion of the backfill, the street opening shall be made safe by topping the dirt backfill with an asphaltic cold mix paving material level with the surrounding roadway surface and rolled with an approved method to prevent formation of a hump or depression in the restoration area.

Any trenches and other openings which have settled or been improperly backfilled shall be reopened to the depth required for proper compaction, then refilled and compacted with the surface restored to the required grade. Backfilling of trenches and other openings in the street shall be immediately repaved temporarily with suitable material and maintained until permanent paving is completed.

No trenches or excavations shall be left open overnight unless approved by the Department. If approved, open excavations shall be protected with concrete jersey barriers, steel plates, or other Department-approved methods.

2.1.12.5 Removal of Temporary Facilities and Structures. Within twenty-four (24) hours after the completion of the work, the Permittee shall remove all temporary Facilities and Structures built by the Permittee, and leave the work site clean and free of rubbish, surplus materials and all obstructions.

2.1.13 Plumber's Ditches.

2.1.13.1 Requirements. Plumbers shall comply with all applicable regulations governing the opening and backfilling of ditches.

Plumbers are responsible for their ditch openings for a period of thirty (30) days after notifying the Department that the opening has been backfilled. Such notice shall be filed electronically or as otherwise specified by the Department.

If the backfilling and temporary topping is inadequate, or was performed improperly, the plumber's responsibility for the opening shall continue beyond thirty (30) days until such time as the ditch is permanently restored.

If the plumber's failure to properly backfill and/or level an opening causes an unsafe location, and the Department restores the location, the plumber will be responsible for and billed for the Department's time and material expense in restoring the ditch to a safe condition.

2.1.13.2 Penalties. In addition to any other applicable penalties specified by regulation of the Philadelphia Code, failure to notify the City that an opening was made and backfilled will not relieve the plumber of responsibility. If the plumber fails to electronically register the appropriate backfill notice as directed in Section 12(1)(a) for two (2) ditches, the plumber will be prohibited from purchasing new plumber ditch permits until the proper notifications have been registered with the

Department. Repeated failure to comply with these regulations may result in the suspension of a plumber's permission to operate in the Right-of-Way.

2.1.13.3 Timing. Plumber permits shall be valid for thirty (30) days. If a plumber obtains a permit, then determines that the street opening is not needed, the plumber may apply for a refund of the permit purchase price within the thirty (30) day permit period. No refunds will be issued after the expiration of the plumber permit.

2.1.14 Permanent Restoration of Pavement.

2.1.14.1 Restoration. All pavements shall be promptly restored to the extent directed by the Department and with the same character of material, equal in composition and color to match the existing adjacent pavement, and in accordance with the Department's current specifications.

2.1.14.2 Cut Back. Where the surface area of any ditch is greater than one-half (1/2) square yard, before restoration of the pavement, the base course shall be cut back six inches (6") wider than the original opening on all sides. If the edge of the base course adjacent to and paralleling the curb is within two feet (2') of the edge of the paving or curb, after cut back, the paving shall be removed between the edge of the cut back and the edge of paving or curb.

The surface course shall be cut back six inches (6") from the outer edge of the original opening. The thickness of the base course restoration shall equal the thickness of the existing pavement but shall not be less than eight inches (8") in depth. This same depth applies to streets with stone black base or other types of temporary paving base. The concrete shall be brought up to the same level as the existing base course.

Any ditch with a surface area one-half (112) square yard or less is not required to be cut back.

2.1.14.3 Surface Preparation. All exposed vertical surfaces of existing binder and surface course shall be painted with hot asphaltic cement immediately prior to the application of the asphalt top to any ditch or trench. The surface of the concrete base shall be thoroughly cleaned and the application of a tack coat of bituminous material E-1 (AASHTO Equivalent RS-1) in the amount of 1/15 of a gallon per square yard shall be applied.

2.1.14.4 Finished Surface. Unless approved in writing by the Department, the finished or wearing surface of the restored ditch shall match in kind the existing roadway surface pavement, including restorations in streets that have granite block, brick, or other special surfaces. The topped-off ditch shall have a smooth surface showing no evidence of honeycomb, roller or iron marks.

After topping is completed the seam between the existing surface course and the newly restored top shall be neatly sealed with asphaltic cement. If the ditch ii to ' e immediately opened to traffic, dry sand, or Portland cement shall be evenly spread over the newly installed seal to prevent it being picked up or spread by automobile tires.

The use of asphaltic or black base is only permitted when the street must immediately be opened to traffic. Such cases include ditches in track areas and streets with only one lane available for traffic. Black base may also be used to patch ditches in inclement weather or where the use of concrete would be impossible or impractical due to future construction. The Department's written approval must be obtained before black base can be used for ditch restorations.

If restoration is to be in finished concrete roadway paving, the dimensions shall be the same as for base restoration. The finished edge of restoration in concrete pavement shall be made with a concrete saw just prior to the paving operation. The minimum depth of cut shall be one and one half inches (1W').

2.1.14.5 Line-striping. All line-striping disturbed by excavation must be restored according to the Department's specifications for that street. If the line-striping is not completed, and the Department places the line-striping on the restored area of the street, the Permittee will be billed for the Department's cost.

2.1.14.6 Lines and Grades. Where permanent pavement and curbing do not exist, the Permittee will be required to obtain from the Department the necessary line and grade stakes. The Permittee will be required to pay for this service in accordance with the Department's schedule of charges.

The Permittee will be responsible for preservation of all monuments and bench marks and for all stakes after being set by the Department's surveyors. Any disturbed stakes must be replaced by the Department's surveyor and paid for at the rate previously indicated.

2.1.14.7 Restoration of Emergencies. In the event of an Emergency which results in the disturbance of 40% or more of the street, the owner of the Facility which caused the &mage shall be responsible for determining the scope and extent of the damage in terms of both and Facilities affected. The responsible Facility owner must inform affected utilities in a timely fashion of the scope and extent of damage, so that the street and Facilities in the Right-of-Way can be restored as quickly as possible. The responsible Facility owner shall contact the Department to determine how the street will be restored and what party(ies) will bear responsibility.

2.1.14.8 Maintenance of Pavements. All restored pavements shall be maintained to the Department's satisfaction, during the time of any existing guarantee, or as required by Ordinance of Council, but in no case for a period of less than five (5)

years. Permittees shall make repairs to pavements within twenty-four (24) hours of receipt of the Department's notice.

2.1.14.9 Timing of Restoration By Department. Between July 1st and November 30th of each year, permanent restoration of all street openings less than twenty-five (25) square yards in size shall be performed within thirty (30) days after backfilling. Between December 1st and March 31st of the following year, if inclement weather does not allow permanent restoration, street openings may be temporarily restored with cold patch and maintained until permanent restoration is performed.

2.1.14.10 Inspection of Work. All work and materials used in building Structures and in re- storing or maintaining pavements shall be to the Department's satisfaction and any work or material rejected by the Department must be immediately replaced. Rejected materials shall be immediately removed from the work site.

If the Department determines it is desirable or necessary to employ one or more special inspectors to supervise the proposed work, the Department shall appoint such inspector(s). The Applicant shall deposit a sufficient sum with the Department for the payment of such service.

2.1.15 Milling, Paving, and Full Depth Restoration.

2.1.15.1 Utilities, Full Depth Restoration.

2.1.15.1.1 General Requirement. If work in the street for one project disturbs Fifty percent (50%) of the Roadway Block, the Permittee shall provide a full depth restoration for the entire length of the Roadway Block.

2.1.15.1.2 The Department may, in its sole discretion, consider other factors in requiring full depth restoration, such as the locations of the excavations, the extent of lateral trenching for utility service, evidence of existing subsidence and relevant engineering studies.

2.1.15.1.3 The General Requirement applies to the project as constructed. If the project is designed and approved at less than Fifty Percent (50%) disturbance, and the constructed project exceeds the design and the approved disturbance and disturbs Fifty Percent (50%) or more of the Roadway Block is disturbed, then full depth restoration is required.

2.1.15.1.4 If more than one utility or agency is involved in work in the street and openings for the project, and the cumulative disturbance of the work, as constructed, is Fifty Percent (50%) or more of the Roadway Block, the lead utility or agency shall be responsible for a full depth restoration. The lead utility or agency must coordinate with other parties

participating in the project and for seeking reimbursement for its costs from those other agencies or utilities.

2.1.15.1.5 Full depth restoration includes all line-striping required by the Department's specifications for that street. If the line-striping is not completed, and the Department places the line-striping on the restored street, the lead utility or agency will be responsible for and billed for the Department's cost.

2.1.15.2 Utilities, Milling and Paving

2.1.15.2.1 General Requirements:

If work in the street for one project disturbs less than Fifty Percent of the Roadway Block, and the work is sewer work or involves replacement of two or more Facilities, the Roadway Block must be milled and paved from curb to curb.

If work in the street disturbs less than Fifty Percent (50%) of the Roadway Block, and does not meet the criteria in subsection (A) above, the street openings and excavationsmust meet the requirements of subsection 2.1.12 of this Regulation for Trench Restoration.

2.1.15.2.2 The Department may, in its sole discretion, consider other factors in requiring the Roadway Block to be milled and paved from curb to curb, such as the locations of the excavations, the extent of lateral trenching for utility service, evidence of existing subsidence and relevant engineering studies.

2.1.15.3 Private Developers, Milling and Paving.

2.1.15.3.1 Except as noted in Subsections (c) and (d) below, private development projects of the following types which disturb in excess of Forty Percent (40%) of the roadway within the Adjacent Roadway Area as defined in Subsection (b), or install an average of three or more utility connections per lot or property involved in the development, shall be required to mill and pave the full Adjacent Roadway Area:

New construction or Substantial Improvement of six (6) or more residential lots or properties fronting on the same Roadway Block.

Any project involving new construction or Substantial Improvement of at least one hundred linear feet (100') of frontage on a Roadway Block;

Any private development project fronting on an Historic Street.

2.1.15.3.2 Adjacent Roadway Area shall mean:

For streets with a legal roadway width of sixteen feet (16') or less, the area of roadway adjacent to the private development project bounded by the two outer property lines of the project, extended to the opposing curb face so as to intersect it at, or near, right angles;

For streets with a legal roadway width greater than sixteen feet (16'), and where disturbance to the existing pavement extends beyond the centerline of the roadway, the area of roadway adjacent to the private development project bounded by the t-v & outer property lines of the project, extended to the opposing curb face so as to intersect it at, or near, right angles.

For streets with a legal roadway width greater than sixteen feet (16’), and where disturbance to the existing pavement extends beyond the centerline of the roadway, the area of roadway adjacent to the private development project bounded by the two outer property lines of the project, extended to the roadway centerline so as to intersect it at, or near, right angles.

Where disturbance to the existing pavement does not extend fully to the two outer property lines of the project, the area of roadway adjacent to the private development project bounded by the limit of disturbance of the project extended to the roadway centerline (or opposing curb face, as appropriate) so as to intersect at, or near, right angles. Such limits of disturbance, when determined by the Department, shall not be less than the lesser of one hundred linear feet (100’) of street frontage or six (6) residential lots; or

Where new construction or Substantial improvement is at a street corner, the Adjacent Roadway Area shall be either of two areas adjacent to the private development project bounded by the property lines of the project, extended to the opposing curb face so as to intersect them at, or near, right angles.

2.1.15.3.3 Where a private development project overlaps with, or includes utility extensions or replacements, the requirements of Section 14 (1) or (2) supersedes the requirements of this Section.

2.1.15.3.4 Where a private development project meeting the criteria of Section 14(3)(a) either fronts on an Historic Street and disturbs in excess of 40% of the Adjacent Roadway Area in that Historic Street, or the project requires installing an average of three or more utility connections per lot or property involved in the development, a full depth restoration of the Adjacent Roadway Area is required.

2.1.15.3.5 Where milling and repaving is triggered by disturbances in two or more Adjacent Roadway Areas abutting an intersection, the full

roadway of the intersection between the four (4) house lines of intersection must be milled and repaved.

2.1.15.3.6 The Department will appoint all agents responsible for determining the Adjacent Roadway Area, the percentage of the Adjacent Roadway Area disturbed any milling and paving requirements; or shall require a licensed professional engineer prepare calculations for this purpose. Appeals related to any such determinations or requirements must be submitted, in writing, to the Department's Chief Highway Engineer for consideration.

2.1.15.3.7 Disturbed area shall include all trench, curb reconstruction, and cut back areas, per Street Department Standard Details L-892 and L-901. Areas disturbed for reasons other than utility installation or curb reconstruction, including areas disturbed by heavy machinery incidental to construction, may also be included in the disturbed area calculation.

2.1.15.3.8 If more than one contractor, utility or agency is involved work in the street openings for the project and the cumulative disturbance from all those involved at least 40% as constructed, the Developer must do the milling and repaving.

2.1.15.3.9 Required milling and repaving shall include all line-striping required by the Department's specifications for that street. If the line-striping is not completed and the Department places the line-striping on the restored street, the Developer will be billed for the Department's costs.

2.1.15.4 All work must be completed in a timely manner, and in accordance with the approved plans, as determined prior to the start of construction. Failure to complete any work in a timely manner will serve as justification for a revocation of permits, holds on any Certificates of Occupancy, or the issuance of a Stop Work Order.

2.1.15.5 Degradation fees required for work within any area subject to the milling and repaving or full depth restoration requirements of this Section will be waived. Degradation fees paid in advance of a determination of the applicability of this Section will be refunded.

2.1.15.6 Moratorium

2.1.16 Structures within the Right-of-Way.

2.1.16.1 Interference with Existing Structures or Facilities. New Structures shall not interfere with existing Structures or Facilities, or their connections, except where absolutely necessary, and then only with the previously obtained written consent of the Commissioners of the departments having jurisdiction over the Structures involved. Any modification of existing Structures or Facilities found to

be necessary must be made by orunder the direction of the department or public utility concerned and at Permittee's sole expense. All necessary supports and protections to existing Structures or Facilities shall be promptly supplied by or at the Permittee' s expense and to the satisfaction of the department or public utility concerned.

2.1.16.2 Removal Generally. If, in the construction of any municipal work, it shall become necessary to change the location of any existing privately owned Structures or Facilities occupying the Right-of-Way, their location shall be changed, at the owner's sole expense, to such new locations as specified by the Department.

2.1.16.3 Minimum Depth of Structures. The minimum depth of Structures constructed within the Right-of-Way shall be as follows:

Roadway between Curb Lines. No portion of a new Structure, when in place, shall be less than twenty-four inches (24") below the surface of the pavement, except that portion which is designed to form a part of the pavement.

Footways, Curb to Building Line. No portion of a new Structure, when in place, shall be less than fifteen inches (15") below the footway surface, except that portion which is designed to form a part of the paving.

Vaults. The outside top of vault shall be at least four feet (4’) below the established grade of the footway over the same, in the erection, construction or reconstruction of such vaults. This applies to any vault, whether privately owned or utility, in the Right-of-Way.

2.1.16.4 Exposed Surfaces of Structures. All Structures within the Right-of-Way shall be maintained within three-eighths inch (3/8") of the existing surrounding grade. All loose, slippery or broken utility maintenance hole (manhole) covers, castings and other Structures shall be replaced at the Department's direction and to the Department's satisfaction.

2.1.16.5 Leak Proofing of Underground Structures. Any underground Structure within the Right-of-Way, including manholes, vaults, conduits, pipes, or passageways, shall be so constructed and maintained as to prevent the leakage of gas, water, or other liquid.

2.1.16.6 Maintenance of Structures. All privately owned Structures occupying locations in the Right-of-Way, that may be exposed during construction, reconstruction or any municipal work, shall be safeguarded and maintained by the Permittee during the course of the work. If the exposed Structure requires reconstruction or the placing of permanent supports, the owner(s) of the Structure shall perform such work at their sole expense.

2.1.16.7 Re-Occupation of Vault Space. The Permittee is fully responsibility for all claims of damage, loss and/or injury arising from the occupation or vacation of the street by and from the construction, maintenance and removal of vaults.

2.1.16.8 Drawing of Finished Work. Immediately after the completion of permitted work, Permittee shall electronically submit complete detail drawings ("as-builts") as specified by the Department, showing the work as constructed, together with a record of the character and location of previously existing Facilities encountered during the work.

2.1.16.9 All Structures shall be maintained at all times to the Department's satisfaction.

2.1.17 Refrigerating Pipes.

2.1.17.1 Agreement Required. Applicants shall enter into an agreement with the City for permission to lay refrigerating pipes, and obtain a bond satisfactory to the City Solicitor in the sum of twenty-five thousand Dollars ($25,000.00). Applicant shall indemnify the City for any loss or damages that may occur in the exercise of the privileges granted or which may be granted by the City, and shall comply with all Department regulations.

2.1.17.2 Construction. The methods and materials used in the construction of refrigerating pipes shall be subject to the approval of the Department and Water Department.

Before laying any pipes, the Permittee shall furnish to the Department a certificate from a responsible agency, certifying to the character, quality, size, thickness, and condition of the pipe and fittings and indicating the test to which the pipe has been subjected.

The pipe line, after being constructed and before the trench is backfilled, shall be subject to a hydrostatic test of at least three hundred pounds (300lbs) per square inch for a period of at least three (3) hours. This test shall be made in the presence of the Water Department representatives.

2.1.18 Tunneling.

2.1.18.1 General Prohibition. Tunneling within the Right of Way to effect repairs is generally prohibited. Two (2) exceptions to this rule are:

Placing Facilities under railroad tracks or conduits in accordance with standard specifications;

With the written approval of the Department’s Chief Highway Engineer or designee.

2.1.19 Responsibility for Injuries to Persons or Property.

No Liability to City. The Permittee shall be responsible for any injury to any person or any damage to any property resulting from or by the construction or maintenance of the work herein indicated, or the occupation of the Right-of-Way thereby, or defects or obstructions, or from any other cause whatsoever during the progress of the work or at any time. The Permittee shall indemnify, release, and save harmless the City from all suits or actions of every character, name and description, brought for or on account of any injuries or damages received or sustained by any Structure, Facility, property, person or persons by or from the construction or maintenance of the work herein indicated, the occupation of the Right-of-Way thereby, negligence in safeguarding the work, improper methods or materials used in constructing, or by or on account of any act or omission of the said Permittee or Permittee's agents or employees.

2.1.20 Severability.

Severability. If any clause, sentence, paragraph or part of this Regulation, or the application thereof to any person or circumstance, shall for any reason be adjudged by a court of competent jurisdiction to be invalid, such judgment shall not affect, impair or invalidate the remainder of this regulation nor the application of such clause, sentence, paragraph or part to other persons or circumstances but shall be confined in its operation to clause, sentence, paragraph or part thereof and to the persons or circumstances directly involved in the controversy in which such judgment shall have been rendered.

2.1.21 Repeal of Prior Versions. Repeal. The Regulations of the Department of Streets for Street Openings and Excavations (1955), as well as Regulations for Openings and Restoring Street Openings (1980) as amended in 1986, 2006, and 2012, are hereby repealed. This Regulation is not intended to repeal or modify any portion of The Regulations governing Right of Way Management of the Department of Streets, effective January 12, 2006, as amended in 2009 and 2012.

2.1.22 Effective Date. These Regulations shall be effective immediately following the completion of the procedures required by Section 8-407 of the Philadelphia Home Rule Charter.

2.1.23 Moratorium.

2.2 Regulations Governing Repair and Reconstruction of Alleys, Driveways, and Retaining Walls.

2.2.1 Construction of Retaining Walls. Retaining walls shall consist of concrete masonry or rubble masonry, including dry stone backing and 3 inch cast iron weepers, having the dimensions shown on the plans and employing materials and methods of construction conforming to standard specifications for masonry construction. Concrete for this purpose shall consist of Class 20-1 or 20-1, unless otherwise specified.

Salvaged stone from an existing wall may be used for dry stone backing or, after careful cleaning, in a new stone wall, when approved by the engineer.

Sheathing and shoring lumber, placed in connection with the construction of retaining walls or drainage work will be left in place only on the written order of the Engineer.

2.2.2 Regulations Governing the Repair and Reconstruction of Alleys, Driveways and Retaining Walls to Correct Public Health Nuisances. Pursuant to Section 5-301(b) of the Philadelphia Home Rule Charter and Act of July 11, 1923, P.L. 1032, as amended, of the General Assembly of Pennsylvania, the following regulations are promulgated by the Board of Health.

2.2.2.1 Alleys – Driveways. A private alley or driveway may be declared a public health nuisance when one or more of the following conditions exist:

Defective drainage resulting in the formation of stagnant pools of water or the production of noxious odors or excessive drainage into adjoining properties or areas.

Broken, bulging, depressed or disintegrated paving resulting in hazardous walking or driving conditions, or resulting in conditions conducive to rodent harborage or breeding of flies and mosquitoes.

Rutted, pitted, uneven or unpaved surfaces conducive to the growth of weeds or the collection of dirt or rubbish, or which interfere with the removal of weeds, dirt or rubbish within the alley or driveway lines.

2.2.2.2 Retaining Walls. A private retaining wall may be declared a public health nuisance when one or more of the following conditions exist:

Collapse of wall or portion thereof.

Bulged or tilted wall or portion thereof indicating possible collapse.

Cracked, eroded or pitted surfaces with evidence of interior deterioration indicating possible collapse, or conditions conducive to harborage of rodents or interference with proper drainage.

2.2.2.3 Repairs and Reconstruction of Alleys, Driveways and Retaining Walls. Repairs and/or reconstruction of alleys, driveways or retaining walls which have been declared a public health nuisance shall be accomplished as per the specifications of the Department of Streets.

2.3 Regulations Governing Construction of ADA-Compliant Curb Ramps

2.3.1 Authority

2.3.1.1 These Regulations are promulgated pursuant to Section 11-505(1) and 11-505(6) of The Philadelphia Code, which provide as follows

"The sidewalks of the all public streets, and the roadways and sidewalks of all private streets, shall be graded, curbed, paved and kept in repair at the

expen e of the owners of the land fronting thereon, except as otherwise provided in this Section."
"All sidewalks, curbs, and driveways across sidewalks shall be laid or set in accordance with specifications and regulations of the Department of Streets and the provisions of this Chapter."

2.3.1.2 The installation or replacement of curb ramps is governed by the Federal requirements contained in the Americans with Disabilities Act ("ADA") and associated regulations.

2.3.1.3 Under the ADA, the United States Access Board has developed and continues to maintain accessibility design guidelines for accessible buildings and facilities known as the 2010 ADA Standards and the Draft Public Rights-Of- Way Guidelines ("PROWAG"). Both the 2010 ADA Standards and PROWAG provide means to meet the requirements of ADA.

2.3.1.4 Further guidance on ADA compliance has been provided by the Pennsylvania Department of Transportation in its Design Manual, Chapter 6, which incorporates the 2010 ADA Standards and PROWAG.

2.3.1.5 The Department of Streets finds that many curb ramps throughout the City do not comply with the requirements of the ADA, impeding pedestrian use of the Right of Way and creating safety concerns.

2.3.1.6 The Department further finds that a significant cause of curb ramps that do not meet ADA requirements is the practice of repaving sidewalks and streets around existing ramps, rather than replacing the entire system simultaneously.

2.3.1.7 Therefore, to ensure uniform compliance with the requirements of the ADA, the Department is implementi ng the following regulations.

2.3.2 Definitions

ADA-Compliant Ramp. A short pedestrian ramp cutting through a curb or built up to a curb from a lower level which meets all requirements of the ADA and associated regulations.

Path of Travel. A continuous, unobstructed way of pedestrian passage by means of which the altered area may be approached, entered, and exited, and which connects the altered

area with an exterior approach (including sidewalks, streets, and parking areas), an entrance to the facility, and other parts of the facility.

Point of Curvature. The point of the curb intersection at which the curb line ceases to be curved and becomes straight.

Point of Curvature Line. A line drawn at a right angle to the curb line from the Point of Curvature, to the ROW Line extended.

Right of Way ("ROW") Line. The line, as shown on the City Plan dividing real property in which the City has a regulatory interest or interest as a trustee for the public, from privately owned and other real property, also known as the "house line."

Sidewalk. All that area legally open to publ ic use as a pedestrian public way between the curb line and the ROW Line of the abutting property.

2.3.3 Ramp Requirement.

2.3.3.1 Property Owners. The owner of the property which abuts the intersection (i.e. corner property which has ramp area on its sidewalk) must install ADA-Compliant Ramps when work on the abutting Sidewalk will alter the path of travel to an existing, non-ADA Compliant Ramp; or will cause an existing ADA-Compliant Ramp to no longer be ADA compliant; or where no ADA-Compliant Ramp currently exists. For the purposes of this regulation, the path of travel will be considered altered when:

More than 50% of the existing Sidewalk along either of the two intersecting streets forming the corner, and within a rectangular area comprised of the Sidewalk within fifteen feet (15') from the nearest Point of Curvature Line, (See Figure 1) is reset, resurfaced or replaced;

Curb line —— /

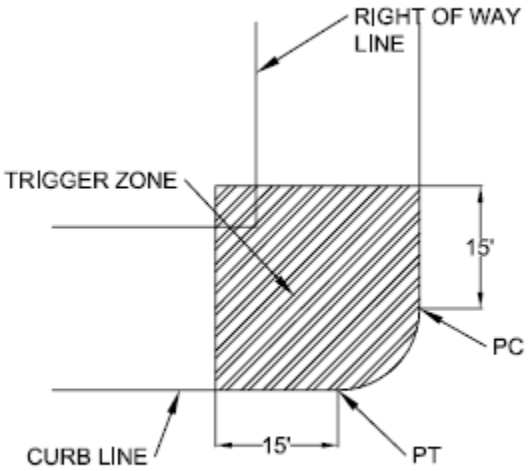

FIGURE 1

Any opening or excavation of greater than one foot (l') square encroaches within five feet (5'), of any Point of Curvature. (See Figure 2).

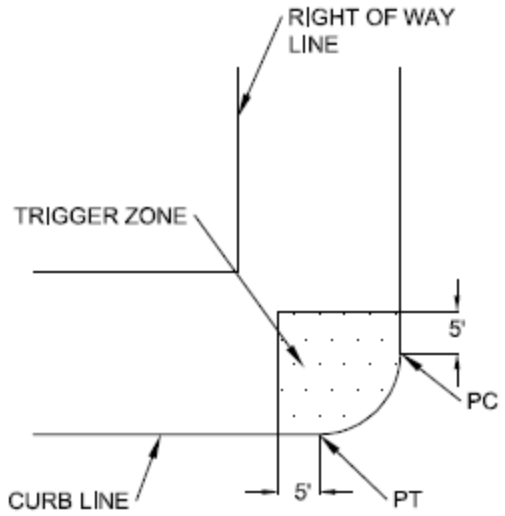

FIGURE 2

Private Utilities. Any private utility working in the ROW must install ADA- Compliant Ramps where the work on the abutting roadway will alter the path of travel to an existing, non-ADA Compliant Ramp; or will cause an existing ADA-Compliant Ramp to no longer be ADA compliant; or where no ADA-Compliant Ramp currently exist. For the purposes of this regulation, the path of travel will be considered altered when:

(i) Any street surface within five feet (5') of any portion of an existing ramp, is milled and resurfaced (See Figure 3),

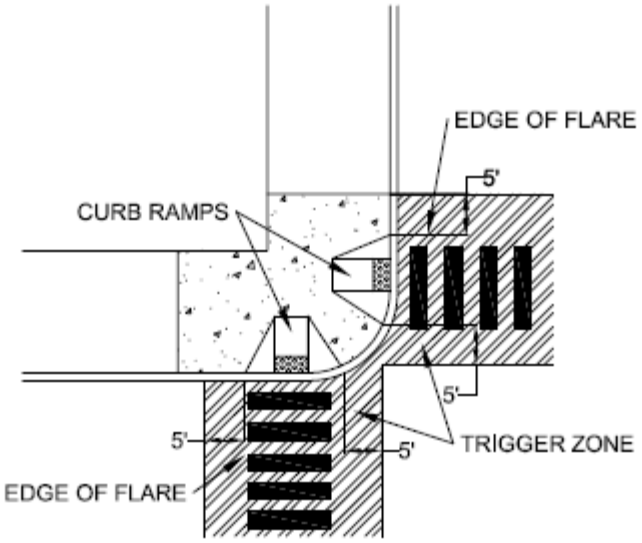

FIGURE 3

Figure 3.

(ii) The total area of surface area milled or resurfaced within the roadway adjacent to the curb ramp area exceeds fifty percent (50%) of the total roadway area of the affected street, measured from centerline of intersection to centerline of intersection using the City's GIS Centerline data.

(iii) Any opening or excavation in the Sidewalk of greater than one foot (1') quare encroaches within five feet (5') from any Point of Curvature Line. (See Figure 4).

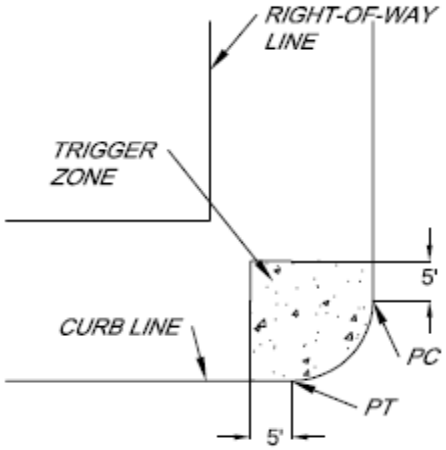

FIGURE 4

City-owned Utilities. City-owned utilities shall also comply with subsection 3.(2). However, if the City has established a City program for curb ramp improvements City-owned utilities shall contribute to curb ramp funding as required by the Streets Department in lieu of arranging for curb ramp improvements under Subsections 3.(2)(a) and 3.(2)(b).

2.3.3.2 Miscellaneous.

All ramp designs must be approved by the Streets Department before construction begins and construction certification must be submitted for acceptance to the Streets Department.

Where work in the ROW by either a property owner or private utility would otherwise require construction of an ADA-Compliant Ramp, but the existing ramp is in good repair and meets the requirements of the ADA, the Streets Department may waive the requirements above upon receipt, review, and approval of as-built inspection records provided for the location.

The obligation to provide an ADA-Compliant Ramp may not be evaded by performing a series of small alterations to the surrounding sidewalk area if those alterations could have been performed as a single undertaking.

Chapter 3: Regulations Governing Specifications for Paving, Structure Concrete, and Parking Lots

3.1 Paving

3.1.1 Subgrading

3.1.1.1 Subgrading of Roadway: The bottom of the excavation and the top of the fill between the outer limits of the new pavement, when completed, will be known as the subgrade. When forms are required the subgrade shall be prepared for an additional width of 18 inches outside of each form line. Subgrading for the construction of an original pavement requires the accurate removal and disposal of all material between the curb lines or for the width of the proposed pavement and between the finished surface of the new pavement and its bottom or subgrade surface, in repaving, subgrading shall include the removal and disposal of all material between the curb lines and between the upper surface of the existing pavement and the bottom or subgrade of the proposed new pavement. Subgrading shall also include the bringing of shoulders and footways to grade, when directed, with material excavated from the subgrade, and the shaping of the shoulders to the required cross-section from the edges of the pavement to the gutter lines. Subgrading shall include thorough compaction by a power roller weighing not less than eight tons, or by a tamping roller, until the surface shall be exactly at the required depth below the intended finished grade of the pavement. Care shall be exercised not to excavate to a depth of more than one-tenth of a foot below the proposed subgrade surface. Soft and spongy places local areas which develop during the sub- grading or base construction operations shall be dug out to a depth of one foot below subgrade surface, back-filled with screenings, crushed aggregate or other suitable granular material paced in 6 inch layers rammed and rolled solidly; Payment for this work to be made at the unit price in the proposal or in the schedule of contingent prices. A power roller weighing not less than five tons shall be kept on the work during the base construction operations. If the subgrade is disturbed during these operations, this roller shall be used in restoring it to the condition in which it was approved. The cost of subgrading for a new pavement (except repaving) sha11 be included in the price bid for the new base. In contracts for re- surfacing and repaving a price will be asked for the removal of the existing surface course or for base course and surface course, respectively.

3.1.1.2 Subgrading in Railway Track Areas: Subgrading in areas occupied by railway tracks shall extend to the bottom of the ties for their full length and for a distance of six inches beyond the outside ends of the ties. This work will include, without additional compensation, the removal and disposal of the material under each rail, down to the subgrade surface, In the case of an existing concrete foundation in the track area, additional payment will be made at the unit price bid per square yard, or at the contingent price, for the removal and disposal of this material, without deduction for the width of the rails.Where railway tracks are to

be removed during repaving operations, the price bid for removing the existing pavement shall also include the filling that may be required to bring the new subgrade to the proper elevation.

3.1.3.3 Subgrading Around Structures: The grade adjoining all inlets shall be uniformly four inches below the normal subgrade and shall extend twelve inches from the outside. No deduction of the surface area or volume of city manholes and inlets will be made in measuring the completed pavement or base.

3.1.3.4 Approval of Subgrade: The subgrade surface shall be approved prior to the construction of the proposed base course and thereafter shall not be used for the storage of materials and shall be maintained by the Contractor at the required elevations and in a condition equal to that existing at the time of its approval.

3.1.3.5 New Underground Structures: New gas and water mains or conduits may be laid during construction operations if authorized by the Department of Streets and the paving Contractor shall cooperate to the extent of providing access to the work and building around the site of open or proposed ditches when necessary. The Contractor shall also facilitate the work of private parties having proper permits to install underground house connections.

3.1.3.6 Resetting of Structures: The Department will serve notice of intended paving operations to all public utility companies or others whoso structures in the street require resetting, but in the event of their failure to do the necessary work, the Contractor shall, prior to construction of new base or surface course, reset to certified lines and grades all man- holes, valve boxes or other structures belonging either to the City or the public service corporations. Compensation for this work shall be at the unit price bid in the proposal, or upon a basis agreed upon between the Contractor and the public service company, or, if indicated in the proposal or specification, it shall be included in the prices bid by the Contractor for the paving work. No paving or base shall be constructed within three feet of the outside edge of any structure until it h s been set to the required lines and grades.

Cast-iron manhole and valve box frames shall be set solidly upon brick or other masonry, fully bedded in mortar composed of l part Portland cement to three parts of Type A or Type B sand and shall then be maintained in their required positions until the completion of paving operations. Minor adjustments to castings shall be made by the use of suitable wedges or shims supplemented by cement mortar, No chipping of cast iron structures will be permitted. Any portion of the substructure damaged during tho progress of the work shall be repaired or replaced by the Contractor. Material or debris falling into the interior of the structure shall be removed promptly.

3.1.3.7 Adjusting Inlet Structures: Wherever necessary, drip-stones and grate top inlet castings shall be reset to the grades required to afford proper drainage as directed, Drip-stones, when reset, shall provide a uniform open mouth of six

inches in depth, except when otherwise directed. Compensa- tion for this work shall be at the price bid in the proposal, or at the contingent price.

3.1.3.8 Sewer and Water Manhole Frames and Covers: New cast iron manhole frames and covers conforming with the current standards of the Department of Water shall, when ordered by the Engineer, be placed upon sewer or water manholes, at the unit prices bid or at the contingent prices.

3.1.2 Guarantee:

3.1.2.1 The Contractor hereby agrees to guarantee the maintenance of all work constructed under the specifications and contract for the following periods of time from the date of completion and acceptance by the City:

- Pavement paid for by the City: one (l) year
- Pavement paid for wholly or in part by assessment hills or work performed under authority of the Ordinance of August 20, 1942 five (5) years

During this period of time the Contractor must, at his own expense, maintain the entire pavement, including the foundation, in satisfactory condition and the Contractor hereby agrees to adjust any in- equalities, settlements over areas backfilled under the paving contract, or other unsatisfactory conditions that may occur or develop in any portion of the pavement, supplying all necessary materials and doing all necessary work, and at the end of the specified period to deliver the pavement or pavements to the City in a condition satisfactory to the Engineer, without any additional allowance or compensation, except where damage to pavement was caused by settlement of backfill made by others.

3.1.2.2 Restoration of Pavement Opened by Permit. During the time for which the Contractor is liable for the maintenance of the work under the specifications and contract, he shall, within twenty (20) days after notice, repave over any openings made in the pavement by authority of any Department of the City, or under permits issued by the Department of Streets, The Contractor shall be paid for the actual area of the surface courses of the pavement restored and for the actual contents of the Portland cement concrete base course replaced at one and one-half times the respective unit contract prices. Where the area of a single opening is less than ten (10) square yards, the Contractor will be paid double the unit prices bid for the several classes of work.

The foundation shall be cut back at least six (6) inches wider on all sides than the original opening. The surface shall be cut back at least an equal distance from the outer edge of the restored foundation.

In the restoration of openings made in concrete roadway pavement, the final cut, preparatory to replacing the concrete shall in all cases be made with an approved concrete saw.

These repairs shall be paid for by the individual, firm or corporation which opened the pavement or by the Department authorizing any such openings a S each particular case shall require, or out of the items for repairs to pavements in the annual appropriations of the Department of Streets, Should the Contractor neglect or refuse to repave over such openings within twenty (20) days after notice, the Commissioner shall have the authority to cause such repairs to be made and to bill the work at fifty (50) percent of the respective unit contract prices for the actual area of surface courses restored and the actual contents of Portland cement concrete base course replaced.

The Contractor hereby agrees that the above costs shall be paid out of moneys due him under this Contract or charged against the security deposited with the City Solicitor.

3.1.2.3 Maintenance Repairs. Should the Contractor neglect to repave over dangerous places Within twenty four (24) hours, or should he neglect to make the general repairs within forty-eight (48) hours after being notified in writing by the Engineer, the Commissioner shall have the authority to cause such repairs to be made at the Contractor' s expense, and the Contractor hereby agrees that any exp0nse incurred by the Commissioner in making repairs which the Contractor has neglected to make, shall be paid out of any moneys due to the Contractor under the contract, or charged against the security deposited with the City Solicitor. At the option of the Commissioner he may purchase materials, tools and equipment and employ labor or contract with other parties to do the work, in which event all costs and expenses hereby incurred shall be charged against the defaulting Contractor or paid out of any moneys which may be due him or which may become due him, or charged against the security bond deposited with the City Solicitor. It is further agreed that repaving over openings or general repairs made by the City after the Contractor has boon notified and has failed to perform the required work will in no way relieve the Contractor from his maintenance guarantee of the entire pavement, including the work performed by the City.

Just prior to the expiration of the guarantee period a final inspection shall be made of each pavement. Any disintegrated, projecting, depressed or otherwise defective areas in the pavement, including the base course when necessary, shall be removed and replaced by the Contractor at his expense. Cracks in the surface course of the pavement may be sealed when directed and approved by the Engineer.

In sheet asphalt and bituminous concrete pavements, trans-verse cracks caused by base contraction or other isolated cracks shall be cleaned and sealed with an approved asphaltic material. Where general crack- ing has occurred in any area of the surface of sheet asphalt or bituminous concrete, so that the distance between approximately parallel cracks is less than 3 feet, or when the areas enclosed by cracks is less than 18 square feet,the entire cracked area shall be cut out back to

sound material and replaced with new pavement. This work shall be done by the Contractor at his expense .

3.1.3 Materials.

3.1.3.1 Tests Of Materials. Wherever in these specifications reference is made to required properti es of materials to be determined by a laboratory test, the method to be used shall be the latest Standard or Tentative Standard Method of the American Society for Testing Materials (ASTM); except where some other testing procedure is specifically indicated.

3.1.3.2 Portland Cement

Portland Cement: Portland cement shall conform to the requirements of ASTM Specification C-150, Types I, II and III respectively. Types I and II may be used interchangeably, unless otherwise specifically indicated. Type III cement (high early strength shall be used when indicated or directed.

Air-Entraining Portland Cement: Air-entraining Portland cement shall conform to the requirements of ASTM Specification C-175, and may be used whenever air-entrained concrete is required in the proposal or in these specifications .Types IA and IIA may be used interchangeably. Type IIIA (high early strength) shall be used when indicated or directed.

Air-Entraining Agents: Air-entraining agents may be .used as an addition to the concrete at the mixer with either Types I, II or III Portland cement for the production of air-entrained concrete. Air-entraining agents shall comply with the requirements of ASTM Specification C-260.

3.1.3.3 Mineral Aggregates.

3.1.3.3.1 Fine Aggregates: Fine aggregates shall consist of sound, hard, durable materials, free from injurious amounts of foreign or deleterious substances and shall meet the respective gradation and quality requirements hereinafter specified. Fine aggregates from previously unused sources of supply shall be tested and approved prior to use.

Type A. Concrete or Cushion Sand. This material shall consist of natural sand or natural sand in a combination of not more than one part of manufactured sand to at least two parts of natural sand. The compressive strength of 1:3 mortar made with this sand shall be at least 90 percent of similar mortar containing standard Ottawa sand, when subjected to test for organic impurities, the color shall be standard.

Type B. Grout or Masonry Sand. This material shall consist of natural sand. The compressive strength of 1:3 mortar made with this sand shall be at least 60% of similar mortar containing standard Ottawa sand. When subjected to test for organic impurities, the color shall be standard.

Type C. Fine Aggregate for Sheet Asphalt or Hot-Mix Bituminous Concrete. This material shall consist of natural sand (except as hereinafter modified) with clean, hard, angular grains, which, aft.er drying and screening, shall meet the grada tion requirements of Table I, Type C-1 . As received at the asphalt plant, it shall be reasonably free from clay in the form of lumps or balls and the sand shall be rejected when a representative sample, thoroughly mixed and in a finely divided condition, contains five per- cent or more by weight of material which is removed by washing through a standard No .325 mesh sieve.

As a further condition for acceptance, a representative sample of sand taken after drying and screening through the asphalt plant shall contain not more than three percent by weight of material which can be removed by washing through a standard No.325 mesh sieve.

Type C-2 fine aggregate, for use in hot-mix bituminous concrete binder or surface course, shall be a blend, made at the asphalt pav- ing plant, of not less than 50% by weight of Type C-1 natural sand with stone screenings or gravel screenings, Only that portion of this product which passes a standard No. 8 laboratory sieve shall be considered as fine aggre-gate, and the gradation shall comply with the requirements of Table I.

Type E fine aggregate (stone or gravel screenings) may also be used, without natural sand 1 in the production of hot-mix bituminous concrete during the period between April 1 and October 1, provided the resulting mixtures comply with the gradation requirements. Type E material, for use in hot·mix bituminous concrete, shall contain not more than 10 percent by weight of particles passing a standard No. 200 laboratory sieve, when sampled at the asphalt plant, prior to drying and screening.

Type D. Paving Gravel. This material shall consist of natural sand or screenings resulting from the crushing of stone, gravel or slag. Natural sand for this purpose shall show not more than l0 percent by weight loss by washing through a No.325 mesh sieve.

Type E. Screenings. This material shall be the product resulting from the crushing and screening of stone, gravel of slag, complying with the quality requirements specified for the respective coarse aggregates.

Type F, Mineral Filler. This material, for use in bitu- minous pavement mixtures, shall consist of limestone dust, Portland cement or other approved material.

3.1.3.3.2 GRADATION TABLE NO. l

Type	Total Amounts Passing Sieves (Square Mesh) % By Weight

	3/8	No. 4	No. 8	No. 10	No. 16	No. 30	No. 40	No. 50	No. 80
A	100	90-100			50-80	30-60		10-30	
B		100	95-100			35-75		10-35	
C-1			100	95-100			50-85		
C-2			100	90-98			38-75		
D	85-100					30-60		10-35	
E	85-100							100	
F									

Type	Total Amounts Passing Sieves (Square Mesh) % By Weight	
	No. 100	No. 200
A	2-5 *	
B	2-10	
C-1		0-5
C-2		1-8
D	1-20	
E	10-30	
F		75-100

(a) Typical (but not complete) uses for the various types of fine aggregate are as follows: A for Portland cement concrete; Type B for grout for granite blocks; Type C for asphalt paving mixtures; Type D for paving gravel; Type E for macadam base; Type F for filler for asphalt mixtures.

* Note. In concrete mixes containing more than 5 bags of cement per cubic yard or in air-entrained mixes containing 4-1/3 or more bags per cubic yard, the minimum percentages passing No. 50 and No. 100 sieves may be reduced to 8% and 1% respectively.

Typical (but not complete) uses for the various types of fine aggregate are as follows: A for Portland cement concrete; Type B for grout for granite blocks; Type C for asphalt paving mixtures; Type D for paving gravel; Type E for macadam base; Type F for filler for asphalt mixtures.

Note: In concrete mixes containing more _than 5 bags of cement per cubic yard or in air- entrained mixes containing 4-1/3 or more bags per cubic yard, the minimum percentages passing No.50 and No .100 sieves may be reduced to 8% and 1% respectively.

3.1.3.3.3 Coarse aggregates:

Coarse aggregates shall be prepared from tough, durable materials, meeting the respective quality requirements indicated, and shall include crushed stone, gravel or crushed gravel, and crushed slag, fill pieces shall be reasonably clean a·nc1 free from coatings of clay, silt or dust and from an excess of flat or elongated

pieces, The maximum amounts of deleterious substances in aggregates for use in concrete shall not exceed the limits stated in ASTM Specification C-33 for the respective products, The several types of coarse aggregate may be used in the various classes of construction for wbi.ch their use is approved in these specifications, in the proposal, or on the plans, Coarse aggregates from previously unused sources of supply shall be tested and approved prior to use.

Crushed stone shall be prepared from tough, durable rock showing a loss by weight in the Los Angeles abrasion test not to exceed 40 percent. (ASTM Method: C-131.)

Gravel or crushed gravel shall consist of hard, tough, durable material, thoroughly washed in the process of production and showing a loss by weight in the Los Angeles abrasion test not to exceed 40 percent.

Crushed gravel shall contain at least 90 percent of all pieces having not less than two fractured faces.

Crushed slag shall consist of tough, durable pieces prepared from air-cooled iron blast furnace slag and shall have a compacted weight per cubic foot of not less than 70 pounds, except that slag for use in bituminous surface treatments shall weigh not less than 72 pounds per cubic foot.

3.1.3.3.4 GRADATION TABLE NO. 2

Coarse Aggregates (a)

Size No.	Total Amounts Passing Sieves (Square Mesh), % By Weights								
	No. 8	No. 4	3/8”	½”	¾”	1”	1-1/4”	1-1/2”	2”
1	0-10	10-30	75-100	100					
2-A	0-5	0-15		40-60	75-100	100			
2-B	0-5	0-10		25-60		90-100	100		
3-A				0-10		0-30			90-100
3-B		0-5		10-30		35-70			95-100
4-A						0-15			35-70
4-B					0-5			0-15	

Size No.	Total Amounts Passing Sieves (Square Mesh), % By Weights		
	2-1/2”	3-1/2”	4
1			
2-A			
2-B			
3-A	100		

3-B	100		
4-A			
4-B	25-60	100	
		90-100	100

(a) Typical (but not complete) uses for the several sizes are as follows: No. 1 for bituminous surface treatments and bituminous concrete surface course; No. 2-A, binder course for sheet asphalt or hot-ix bituminous concrete; No. 2-B, binder course for sheet asphalt, hot or cold-mix bituminous concrete, and concrete curb and footway, etc. No 3-A, for blending with No. 2-B for coarse aggregate for coarse aggregate for concrete base or concrete roadway or driveway; No. 3-B for coarse aggregate for concrete base, roadway and driveway after combining 2-B and 3-A; No. 4-A and 4-B, alternates for macadam or bituminous macadam base course.

Typical (but not complete) uses for the several sizes are as follows: No. 1 for bituminous surface treatments and bituminous concrete surface course; No. 2-A, binder course for sheet asphalt or hot-mix bituminous concrete; No. 2-B, binder course for sheet asphalt, hot or cold-mix bituminous concrete, and concrete curb and footway, etc.; No . 3-B for blending with No. 2-B for coarse aggregate for concrete base or concrete roadway or driveway; No. 3-B for coarse aggregate for concrete base, roadway and driveway after combining 2-B and 3-A; No. 4-A and 4-B, alternates for macadam or bituminous macadam base course.

3.1.3.4 Portland Cement Concrete

3.1.3.4.1 Classification: Portland cement concrete shall consist of either air-entraned or normal concrete, as specified or directed, and shall conform to one of the following nominal proportions by volume, according to the purpose for which it is to be used.

1:2:5:5 (or, 1 pa r t of Portland cement to 7.5 total parts of fine and coarse aggregate using Type A fine aggregate, crushed stone, gravel or crushed gravel and ha vi ng a cement factor of 4.35 sacks per cubic yard. This concrete shall be used in the construction of concrete base course for all types of pavement, unless otherwise specified.

1:2:4 (or, l part of Portland cement to 6 total parts of fine and coarse aggregate) using Type A fine aggregate, crushed stone, gravel or crushed gravel and ha vi ng a cement factor of 5.3 sacks per cubic yard. This concrete shall be used with the appropriate size of coarse aggregate in the construction of concrete curb, footway, alley driveway pavernents, driveways cross footways, added concrete base over lying an existing concrete base (when specified) and other miscellaneous work, as specified.

1: 2:3 (or, 1 part of Portland cement to 5 total parts of fine and coarse aggregate using Type A fine aggregate and crushed stone, gravel or crushed gravel and having a

cement factor of 6.25 sacks per cubic yard. This concrete shall be used in the construction of finished concrete roadway pavement and elsewhere as specified.

1:1.5:3 (or, 1 part of Portland cement to 4.5 total parts of fine and coarse aggregate) using Type A fine aggregate and crushed stone, gravel or crushed gravel (size 2-A or 2-B) and having a cement factor of 6.7 sacks per cubic yard. This concrete shall be used in the construction of header curb, integrally with the concrete base for sheet asphalt, bituminous concrete or other pavement, where specified.

Proportioning: In all central-mixing and batching plants the volumetric proportions shall be converted into weights (including proper allowances f or surface moistures) before mixing. One cubic foot of Portland cement shall equal 94 pounds, one cubic foot of compacted surface-dry Type A sand and one cubic foot of compacted surf ace-dry cru shed stone, gravel or crushed gravel (in each ca se based upon a bulk specific gravity of 2.65) shall be rated at 108 and 102 pounds respectively. For aggregates having, a specific gravity greater or less than 2.65 by more than one percent, the respective unit weights shall be adjusted proportionately according to their actual bulk specific gravities.

For purposes of improved workability and density, the nominal proportions previously designated may be adjusted within the limits shown in Table 3 a t the discretion of the Engineer, but the total part s of aggregates to one part of cement shall remain constant (except in the case of air-entrained concrete). The cement factor for a given mix shall be the same in all cases.

In air-entrained concrete the quantity of fine aggregate shall generally be reduced (within the limits shown in Table 3) in direct relation to the volume of air introduced into the mixture, but the cement factor per cubic yard shall remain constant.

Use of Air-Entrained Concrete: Air-entrained concrete shall be used in all exposed construction, including curb, footway gutters, integral header curb, finished concrete pavement or driveways and traffic islands.

For purposes of improved workability or to overcome segregation, air-entrained concrete may be used in concrete base course when approved or directed.

Table 3 – PORTLAND CEMENT CONCRETE MIXTURES

Mix	Air Content %	Aggregate Size	Fine/Total Aggregate %	Cement Sacks/Cu.Yd.	Slump on the job
1:2.5:5 1:2.5:5	4 +/- 1.5 Normal	3-B 3-B	31-36 33-38	4.35 4.35	3”-4” 3”-4”
1:2:4 1:2:4	4 +/- 1.5 Normal	2-B 2-B	32-38 35-40	5.3 5.3	3”-5” 3”-5”
1:2:4	4 +/- 1.5	3-B	30-35	5.3	2-1/2”-4”

1:2:4	Normal	3-B	32-37	5.3	2-1/2”-4”
1:2:3 1:2:3	4 +/- 1.5 Normal	3-B 3-B	30-35 32-37	6.25 6.25	2-1/2”-3-1/2” 2-1/2”-3-1/2”
1:1.5:3	4 +/- 1.5	2-B	34-39	6.7	3”-5”

Batching Plants: Patching Plants, whether for use in connection with ready-mixed concrete or concrete to be mixed on the site of the work, shall be inspected and approved by the Engineer prior to use.

All materials shall be weighed, except that Portland cement in whole bags only may be used and water ma y be measured by volume. Separate bins shall be provided for the storage of fine aggregate, and two sizes of course aggregate, the latter to be weighed separately in order to produce the proper gradation for No. 3-B coarse aggregate. Scales, bins and all other requirements for the maintenance of accurate operations and uniformity of results shall conform to the provisions for "Batching Plant" in ASTM Specification C-94 for Ready-Mixed Concrete. The method and equipment f or measuring and adding air-entraining agents shall be approved by the Engineer.

Ready Mixed Concrete: Ready-mixed concrete plants shall be inspected and approved by the Engineer prior to use. The producer shall afford proper facilities for the inspection of materials and processes used during the manufacture of the concrete. Ready-mixed concrete shall be produced at a central-mixing plant.

Requirements for batching plant shall be as previously stated. The revolutions of the mixer drum shall conform to the rating of the manufacturer and the volume of mixed concrete in each batch shall not exceed the mixer manufacturer's rated capacity by more than 10 percent. Automatic timing devices and other requirements for the proper operation of a central-mixing plant in order to ensure a uniform product complying with the requirements of this specification shall be in accordance with the provisions of ASTM Specification C-94 for Ready-Mixed Concrete, except as herein modified.

Time of mix at central-mixing plants shall be 1 – ¼ minutes, except that this time shall be increased, in the amount directed by the Engineer, when the character of the materials and the consistency of the concrete require a longer mixing period in order to produce homogeneous concrete as discharged from the mixer.

The consistency of the concrete at the mixer, as measured by the slump test, shall be such as to meet the requirements of Table 3 for the several classes of concrete as delivered on the work.

Length of haul shall be governed by an elapsed time of 1-1/2 Hours between mixing and placing in the work (as determined from the time stamped upon a delivery ticket accompanying each load of concrete, as the load leaves the mixing plant); except that in hot weather the elapsed time may be reduced as directed if necessary to overcome an excessive reduction in the slump of the concrete in transit.

Delivery of ready-mixed concrete shall be in unapproved agitating containers unless the use of other equipment is specifically approved by the Engineer.

Job-Mixed Concrete: Portland cement for use in concrete to be mixed on the site of the work shall be hauled and stored in a manner to provide adequate protection against the action of moisture either in the atmosphere or in concrete aggregates which may be hauled in the vehicle with the cement.

The concrete mixer and its accessories, together with the time of mixing, shall conform to the requirements above.

Hand-mixed concrete or volumetric proportioning of aggregates will not be permitted except under emergency conditions, when approved by the Engineer.

Calcium Chloride: Calcium chloride, used a s an a dmixture in cold weather concreting, shall be the commercial f lake product conforming to ASTM Specification D-98 and shall be added to the concrete in the form of a solution. The quantity, unless otherwise directed, shall be at the rate of two pounds of calcium chloride for each bag of cement.

Mixing Water: Water for use in concrete shall be clean and free from injurious amounts of oil, acid, alkali or organic matter.

3.1.3.5 Granite Blocks

3.1.3.5.1 Granite Blocks: Granite blocks shall be either smooth dressed blocks or redressed and reheaded blocks, as specified in the proposal.

Smooth dressed blocks shall be of granite of medium-aize grain, showing a n even distribution of constituent materials. They shall be of uniform quality and texture throughout and free from seams or disintegrated material s. The toughness of the granite shall be not less than 9 (ASTM Method: D-3) and the French co-efficient of wear (as determined upon fragments as nearly cubical as practicable) shall be not less than 11 (ASTM Method: D-2).

Redressed and reheaded blocks shall be obtained from selected old blocks and crossing stones furnished by the City.

3.1.3.5.2 Smooth Dressed Blocks: These blocks shall be approximately rectangular on the top surface and sides and uniform in thickness. The

size of the blocks shall be a s follows: Not less than 8 inches nor more than 12 inches in length averaging not more than 10 inches; not less than 3-1/2 inches nor more than 4-1/2 inches in width, and not less than 4-3/4 inches nor more than 5-1/4 inches in depth, unless otherwise specified. The Contractor shall select a definite width for the blocks to be used in each ci ty block within the limits of the contract. All blocks shall be of the selected width, with an allowable variation of ¼ inch either way, but within the limits for width of blocks a s previously specified. The blocks shall be so cut that the joints between the individual blocks when laid shall not exceed ½ inch and shall average not more than 3/8 inch. The top surface of the block shall have no depressions greater than 3/8 inch from a straight-edge laid in any direction and parallel to the genera l surface of the block. Not more than one drill hole shall show on the head of a block and none on the ends.

3.1.3.5.3 Redressed Blocks: Redressed b locks shall consist of selected blocks cu t or split into blocks of the required depth and so dressed a s to have the top and side faces substantially rectangular in shape, in order to form, when la id, close end joints, and side joints not exceeding 1/2 inch in width.

The blocks after dressing shall be 5 to 6-1/2 inches in length, 3-1/2 to 5 inches in width and shall generally have a depth of from 4-3/4 to 5-1/4 inches, averaging 5 inches as determined by gauging at the time of cutting. The Engineer reserves the right to adopt one-half the average prevailing length of the old blocks as the average depth of redressed block to be used for any particular street or portion of a street. The average depth of blocks designated for use in any street or portion of a street will not be less than 4-1/2 inches, nor more than 6 inches, but the total variation in depth of block for any individual section of pavement shall not exceed 1/2 inch.

The heads of the blocks shall not show irregularities after redressing, exceeding 3/8 of an inch.

3.1.3.5.4 Reheaded Blocks: Those blocks shall consist of selected blocks, reheaded, having a length of 8 to 10 inches and otherwise meeting the same requirements as to form and dimensions as the redressed blocks used in the same location.

3.1.3.6 Vitrified Paving Brick

Vitrified Brick: Vitrified brick (except for traffic markers) shall be wire-cut, vertical fiber with lugs, thoroughly annealed, tough, durable, non-absorptive and evenly burned. When broken they shall show a dense, stone-like body, free from lime, air-pockets, cracks or marked laminations. Kiln marks shall not exceed 3/16 inch in depth and the wearing surface shall show only slight marks. They shall not

vary from the size requirements for width and depth by more than 1/8 inch nor from the length requirement by more than 1/4 inch.

Side lugs shall be not less than two in number, 1/8 inch to ¼ inch in height, with total area measured at the base of the lugs not to exceed 3 square inches. No lug shall be continuous from top to bottom of brick, but shall be of a type that allows free horizontal f low of the filler. Not less than two non-continuous lugs or portions of lugs shall be provided on each end of each brick. Lugs shall be non-meshi ng, shall have a total base area of not more than 2-1/2 square inches and shall permit free horizontal flow of the filler. End lugs shall produce a joint opening of 1/8 to 1/4 inch.

Size of Brick: Vertical fiber brick shall be 3 inches in depth, 4 inches in width and 8-1/2 inches in length, unless otherwise specified.

Rattler Test: The results of the rattler test on a representative sample from each carload, or equivalent number of brick, shall provide the basis for acceptance. The loss by weight in this test (following the procedure in ASTM Specification C-7, including the provisions for retesting) shall not exceed 18 percent.

No car of brick shall be unloaded until it has been sampled and tested and the results of the test approved by the Engineer.

3.1.3.7 Bituminous Materials

3.1.3.7.1 Asphalt Cement: Asphalt cement for use in sheet asphalt, bituminous concrete pavement, bituminous macadam base course or mastic filler for granite block shall conform to one of the three following grades a s specified or directed, based upon penetration as determined at 77 degrees F.; 50-60; 60-70; 70-80 or 85-00. In all other respects the asphalt cement shall conform to the requirements of ASTM Specification D-946.

3.1.3.7.2 Vitrified Brick Filler: This material, f or use as a joint filler in vitrified brick pavement, shall be a blown asphalt cement having a softening point (Ring and Ball Method) of 167 to 185 deg. F. In all other respects it shall conform to ASTM Specification D-241.

3.1.3.7.3 Asphalt Curing Compound: This material, for use as a curing agent for Portland cement concrete shall be either a cut-back asphalt cement or an emulsified asphalt conforming to one of the following specifications

Asphalt Cut-Back. This material shall be an asphalt cement compounded with a suitable volatile naphtha and the resulting product shall conform to the requirements for rapid curing oil, Grade RC-0, ASTM Specification D-

597, except that the furol viscosity, a s determined at 77 deg. F., shall not exceed 120 seconds.

Asphalt Emulsion. This material, f or use in curing concrete, shall meet the following requirements:

	Minimum	Maximum
Viscosity, Saybolt Furol at 77 degrees F., Sec.		50
Distillation – Asphalt cement, % by weight	45	55
Water, % by weight	45	55
Residue from Distillation: Specific gravity 77/77 deg. F.	1.0	
Penetration at 77 deg. F., 100 gr., 5 sec.	100	200
Ductility at 77 deg. F., CMS	40	
Solubility in CS_2, % by weight	95	
Ash, % by weight		2.0

This material shall also be subjected to standard settlement, demulsibility and sieve tests when directed.

3.1.3.7.4 Rapid Curing Asphalt Oil:

This material, for use in the preparation of bituminous mastic cushion for vitrified brick pavement and for joint sealing in sheet asphalt or bituminous concrete, shall consist of an asphalt cement compounded with a suitable volatile naphtha. The resulting product shall conform to requirements for rapid curing oil, Grade RC-3, ASTM Specification D-597 and shall have a viscosity (Saybolt Furol at 140 deg. F.) between 250 2nd 500 seconds. Within these limits the viscosity shall be varied, as may be directed by the Engineer, in accordance with seasonal and other conditions of use.

This material may be heated, if required, to a temperature not exceeding 175 deg. F.

Bituminous Tack Coat. This material shall be a rapid curing Asphalt cut-back product, to be applied a t the specified rate to a thoroughly cleaned existing pavement surface or base. The rapid curing oil should conform to the quality and consistency requirements of either Grade RC-1 or RC-2 of ASTM Specification D-597, a s ma y be directed by the Engineer, in accordance with weather conditions and the condition of the surface to

which it is to be applied. Application temperatures shall be 75-150 deg. F. for RC-l and 100-175 deg. for RC-2.

Cut-Back Emulsified Asphalt: This material, for use in the preparation of cold-mix bituminous concrete, or elsewhere a s specified, may be heated if required, but not in excess of 175 deg. F. The asphalt cut-back used in its preparation shall consist of an asphalt cement (85-100 penetration) complying with the requirements of subsection (g)(1) above, cut-back with a sui table volatile petroleum naptha. The resulting material shall comply with the following detailed requirements:

Miscibility - The cutback emulsified asphalt shall not be miscible with water in any proportions.

Settlement - The material shall show no appreciable separation of water after standing undisturbed in an air-tight container for five (5) days a t room temperature, and when subjected to the settlement test, A.S.T.M. D-244-49 which is found on Page #991 of Part #3, 1949, the residue in the top shall not vary more than one (1) per cent (numerical difference) from the residue in the bot tom.

(iii) Freezing Test - The cutback emulsified asphalt shall remain homogenous after fifteen (15) hours at zero degrees F., plus or minus (10) degrees F.

The cutback emulsified asphalt shall also meet the following requirements

	TYPE III	
	Minimum	Maximum
Viscosity Furol @ 140 deg. F., sec.	450	700
Residue, asphalt content % by weight	80	90
Water content, % by weight	4	12
Naptha content, % by weight	8	21

Distillation Residue	TYPE III	
	Minimum	Maximum
Penetration @ 77 deg. F., 100gr., 5 sec.	80	125
Specific Gravity @ 60 deg. / 60 deg. F.	1.00	
Ductility at 77 deg. F. cms.	100	

Solubility in carbon disulphide, % by weight	98.0	
Ash, % by weight		1.0

NOTE:

Seasonal Viscosity Range:

May 1st to October 31st	550	700
November 1st to April 30th	450	550

Methods of Testing: The requirements and specifications, as hereinbefore noted, shall be determined in accordance with the standard methods of American Association of the State Highway Officials, or methods designated in the foregoing with the exception of the distillation which shall be in accordance with the procedure noted below.

Distillation: The cutback emulsified asphalt shall be dehydrated and then distilled in accordance with A.A.S.H.O. T78-49. Th e material shall be dehydrated by open evaporation as follows:

Weigh two hundred (200) grams of the heated material into a tared copper breaker of one liter capacity. Heat with constant stirring to a temperature of three hundred and fifty (350) degrees Fahrenheit. This temperature shall be attained within f if teen (15) to twenty (20) minutes. Weigh the residue.

One hundred and fifty (150) grams of the dehydrated material shall be weighed into a tared flask and distilled in accordance with the method designated above. The residue from the distillation shall be handled a s directed in the standard method of test with the additional requirement that a tared six (6) ounce tin shall be used f or collecting the residue. Weigh the emptied distillation flask. When the dehydration does not yield sufficient residue f or a one hundred and fifty (150) GRAM DISTILLATION CHARGE, or when such residue foams excessively in the flask on distillation, an approximate charge of one hundred and twenty-five (125) grams may be used.

The asphalt content percent by weight shall be calculated by the following formulae:

100 Grams	150 Grams	200 Grams
$\frac{A (B / C)}{D}$	$\frac{A (B / C)}{D}$	$\frac{A (B / C)}{D}$

Where:

Weight in grams of residue in copper beaker after open evaporation to three hundred and fifty (350) degrees Fahrenheit.

Weight in grams of residue in six (6) ounce tin.

Weight in grams of residue in distillation flask.

Weight in grams of residue from open evaporation taken for distillation test.

This weight is normally one hundred and fifty (150) grams as specified above.

Bituminous Material for Joint Sealing: This material, for hot pouring use in sealing joints and cracks in Portland cement concrete road way and alley driveway construction shall conform to one of the following requirements:

Asphalt Cement with Mineral Filler. This material shall consist of an asphalt cement with mineral flour homogeneously incorporated so that no appreciable settlement of the mixture will occur while the asphalt is maintained in a hot, liquid condition. The asphalt cement shall comply with requirements of 3.1.3, 85-100 penetration, except that the penetration may equal, but not exceed 130 and the softening point (Ring and Ball) shall be not less than 120 deg. F.

The resulting product shall meet the following additional requirements:

Penetration: at 77° F . ,	100 gr., 5 sec,	80 to 100
Ductility a t 77°F., cms.		Not less than 30 15 - 25
Insoluble in carbon disulphide, % by weight		15 - 25

Asphalt-Rubber Compound. This material shall be used only when specified, It shall comply with ASTM Specification D-1190 or Federal Specification SS-F·-336a, and, in use, shall be liquefied in suitable, approved containers, with the utmost care, in order to avoid da mage by overheating.

3.1.3.8 MISCELLANEOUS MATERIALS

3.1.3.8.1 Steel Reinforcement: This reinforcement, for use when specified in reinforced concrete pavement, shall conform to one of the following sets of requirements:

Steel Wire Fabric. This fabric shall consist of steel wire manufactured by either the bessemer or open-hearth process and shall conform to ASTM Specification A-02. The wire shall be rig idly welded at all joints and points of intersection to form a fabric conforming to the requirements for weight and size and spacing of wires, as shown on the plan or indicated in the proposal and shall be furnished only in sheets;

Bar Mats. This reinforcement shall consist of steel bars assembled into mats and having the dimensions shown on the Standard Drawings of the Department of Streets, or indicated on the plan and in the proposal. Bars shall be rigidly welded or clipped a t all joints or points of intersection. The clips shall be of approved size, weight and design in order to ensure maximum rigidity of the ma t during handling and placement.

Bars shall conform to any of the ASTM Specifications A-15, A -16 or A-160, except that bars conforming to ASTM A-16 or A-160 shall not be welded.

3.1.3.8.2 Reinforcement Bars: These bars, f or use when specified in reinforced cement concrete pavement, shall conform to one of the following requirements: bars rolled from billet steel (ASTM Specification A-l5); bars rolled from axle-steel (ASTM Specification A- 60); bars rolled from rail-steel (AST M Specification A-16).

Dowel bars for use in transverse or longitudinal joints shall be structured grade steel (ASTM Specification A-15).

3.1.3.8.3 Preformed Expansion Joint Filler: This material, f or u se in construction of plain and reinforced concrete pavement and concrete alley driveways shall conform to requirements for bituminous joint filler (non-extruding and resilient) in ASTM Specification D-544.

Filler for use in transverse expansion joints in concrete pavements shall be furnished in flat strips cut to conform to the cross-section of the pavement; in lengths equal to a traffic lane (except that shorter pieces may be used if laced or clipped together in a satisfactory manner); and in widths 3/8 of an inch less than the depth of the pavement where it is used. The thickness shall be 3/4 of an inch, unless otherwise specified. Expansion joint filler for longitudinal joints shall be 1/4 inch in thickness and the width shall be equal to the depth of the pavement.

3.1.3.8.4 Petroleum Naphtha (Liquefier): This material for use as a liquefier in the preparation of cold-mix Lituminous concrete, shall be a

petroleum distillate which, when distilled in accordance with ASTM Method D-86, shall comply with the following requirements:

Distillation	Minimum	Maximum
10% by volume, deg. F.		300
50% by vo1ume, deg. F.	280	350
95% by volume, deg. F.		435
Residue, % by volume		2.0

3.1.3.8.5 Hydrated Lime: This material, for use in the preparation of cold-mix bituminous concrete, shall conform to ASTM specification C-6 for Mason's Hydrate.

3.1.3.8.6 Subbase Aggregate: This material, for use when specified in the construction of porous or granular subbase under concrete base or concrete roadway pavement on unstable subgrades, shall consist of one or a combination of the following materials: Run-of-bank or pit-run gravel; run-of-crusher gravel, slag or stone containing dust of fracture and mixed with sand-clay or natural sand; screenings from crushed gravel slag or stone; or cinders in the form of hard, vitreous clinker.

The maximum size of these products shall be between l inch and 3 inches (as determined by square mesh sieve) for run-of-bank and run-of-crusher products, well graded from course to fine shall be 3/8 inch for screenings; and shall not exceed 4 inches for cinders. The content of fines, as determined by washing through a No. 200 sieve, shall be not less than 5 nor more than 15% by weight of the original dried material.

In the use of materials containing a clay binder, the fraction which passes a No. 40 sieve shall be subject to test for liquid limit and plasticity index with maximum values of 30 and 6 respectively.

Preliminary samples of subbase aggregate shall be submitted to the Department of Streets and the source of supply shall be approved by the Engineer prior to use.

3.1.4 Construction Methods

3.1.4.1 General: The material s methods of performance and equipment employed shall conform to the respective requirements for the types of subbase, base course and surface course or pavement hereinafter specified. The Contractor shall provide the necessary organization and equipment to prosecute the work without undue delays.

3.1.4.2 Adjustments to Existing Pavements:

Adjustments between newly constructed and abutting pavements shall be made in a durable and workmanlike manner, within the limits shown on the plan or directed by the Engineer.

Where the abutting pavement is not on concrete base, concrete shall be extended for a width of one foot beyond the limits of the new pavement and shall be paid for at the unit price bid in the proposal.

For sheet asphalt or bituminous concrete, adjustments shall include the removal and disposal of the existing pavement from its base and the replacement with new sheet asphalt or bituminous concrete. Adjustments to concrete roadway pavements shall include the neat and accurate cutting of the existing concrete back to the designated limits, using an approved concrete saw the removal and disposal of the cutout material and replacement with concrete conforming to current standards for concrete pavement construction.

Adjustments to granite block or brick pavement shall include the removal of the existing pavement and repaving with the approved existing block or brick.

The price bid for paving adjustment shall include the removal and replacement or relaying of the existing pavement, excluding concrete base.

3.1.4.3 Opening of Section of Highway to Traffic: Any highway which, after the preliminary aging or curing period required in these specifications, is in the opinion of the Engineer, suitable for use, shall be opened to such travel as may be directed by him and such opening shall not be held in any way to be an acceptance of the work, or as a waiver of any of the requirements of these specifications, only work done upon these sections of highways made necessary by their opening to public travel under written orders from the Engineer, pending the final completion and acceptance of the whole work, shall be performed by the Contractor at his own expense.

3.1.5 Subbases

3.1.5.1 Aggregate Subbase: This subbase, to be constructed on the prepared roadbed when specified, shall consist of a compacted layer of granular or porous material, six inches in depth, un less otherwise indicated in the proposal or on the plan.

3.1.5.2 Materials and Construction Methods:

Materials for use in this work, consisting of one or more of the products specified in 3.1.3 shall be free from foreign materials, vegetable or other organic matter or lumps of clay.

Reasonably uniform material, complying with these requirements and containing sufficient moisture to prevent segregation of coarse and fines and to permit satisfactory competition, shall be deposited directly upon the roadbed and bladed

or otherwise distributed to the required cross-section and depth prior to final shaping and compaction.

When otherwise Satisfactory material segregates upon depositing on the road bed, it shall be re-mixed with approved power-driven equipment and water added as required, prior to final shaping and compaction.

When two or more subbase aggregates are to be mixed on the site of the work, they shall be deposited either in layers, with the coarsest material on the bottom, or in parallel windrows, after which they shall be mixed with approved power-driven equipment and the addition of water, as required, prior to shaping and compaction.

Compaction of subbase material shall be with a three wheel power roller, weighing not less than ten tons, or with an approved rolling tamper. After compaction and prior to the construction of the proposed concrete base or roadway pavement, the aggregate subbase shall be protected from traffic and, in the event of the disturbance of any portion of the subbase before or during concreting operations, it shall be restored to a condition equal in all respects to that which existed when it was first completed and approved.

Payment for this work shall be at the unit price per square yard bid for aggregate subbase, including subgrading.

3.1.5.3 Concrete Subbase. Concrete subbase shall consist of a slab ten inches in thickness, ·unless otherwise specified, to be constructed under railway track crossings, at locations and to the dimensions shown on the plans. The composition of the concrete shall be 1:2.5:5, using No. 3-B coarse aggregate.

The excavation for and pouring of concrete for subbase shall be coordinated with the requirements of the railway company for maintenance of traffic and the completed concrete subbase shall be fully protected from disturbance which might affect its ultimate strength.

This work shall be paid for at the unit price bid per square yard for concrete subbase, including excavation.

3.1.6 Base Courses

3.1.6.1 Concrete Base Courses.

3.1.6.1.1 Description: This base course shall consist of Portland cement concrete, eight inches in uniform depth, unless otherwise specified or as indicated on the plan or in the proposal to be constructed on the previously prepared subgrade. The composition shall be 1:2.5:5, unless otherwise indicated, using No. 3-B coarse aggregate (2" - No .4) including crushed stone, gravel or crushed gravel.

3.1.6.1.2 Subgrade: At the time of depositing the concrete, the sub- grade shall be thoroughly compacted, moist and free from dust or debris, A tandem power roller, weighing not less than 5 tons, shall be available for operation on the work throu0hout the period of placing the concrete.

When the subgrade consists of an existing old concrete base, the surface of the existing base shall be washed clean and a coat of neat cement grout shall be applied to the existing concrete immediately before de- positing the new concrete.

3.1.6.1.3 Subgrade Tester: When a new concrete base is specified to be laid in lanes between form lines to a symetrical cross-section, a subgrade tester with points set to within one-eighth inch of the required depth of concrete shall be used continuously in advance of the placing of concrete.

3.1.6.1.4 Placing Concrete: The concrete shall have a slump of 3 inches to 4 inches, as deposited on the subgrade. It shall be placed as rapidly and continuously as possible in order to avoid partially set joints and without segregation of the mortar from the coarse aggregate. Depressions or other irregularities developing in the surface of the newly placed concrete shall be corrected immediately and the completed surface shall be at the required depth below and parallel to the surface of the proposed pavement.

At curbs, manholes or other structures in the area to be concreted, contact surfaces shall be clean before placing the concrete and special care shall be taken to compact and finish the surface at the exact elevation required for the proposed new pavement.

3.1.6.1.5 Transverse and Longitudinal Joints: At the beginning or end of a day's concreting, or under other conditions where the progress of the operation is to be interrupted, transverse key joints shall be formed by theerection of substantial steel or wood bulkheads, set perpendicular to the subgrade.

When part width construction is specified or required by the conditions pertaining to the work or is permitted by the Engineer, the resulting longitudinal joint shall be of an approved key type; the key to be 2-1/2 inches in depth and 1 to 1-1/2 inches in width.

3.1.6.1.6 Railway Track Areas: In construction in a railway truck area, the concrete shall be placed from the bottom of the tics for their full length and an additional length of six inches beyond the ends up to the proper elevation for the thickness of the proposed surface course, and extending to the web of each rail on each side.

Concrete in railway track areas shall be placed only after the ties have been firmly tamped and bedded and only so long as they continue in that condition.

3.1.6.1.7 Surface Finish: The finished surface of base course concrete shall be dense, free from voids or an excess of mortar, with the course aggregate fully embedded. Long-handled wood floats shall be used for the elimination of surface voids. For sheet asphalt or bituminous concrete, the concrete surface sha11 be uniformly t oughened by the use of an approved chain rolled along when the concrete is at the proper consistency to receive and retain the chain marks, For all pavements other than bituminous, a completely smooth concrete surface finish is required.

Along curbs and immediately adjacent to manholes and other structures in the concrete area, the surface shall be hand-floated,

3.1.6.1.8 Curing: Newly laid concrete base shall be cured by the application of a uniform spray coat consisting of emulsified or cut back liquid asphalt conforming to the requirements for curing compounds in 3.1.3. The curing compound shall be applied at a rate of one-twelfth to one-fifteenth gallon per square yard before the concrete has hardened and while the surface is still moist. The coating shall be uniform so as to produce a surface seal for the purpose of maintaining the moisture in the concrete.

3.1.6.1.9 Granite Blocks Adjacent to Inlets: When sheet asphalt or bituminous concrete pavement is to be laid on a new concrete base, a single row of smooth dressed granite blocks shall be paved directly on the concrete, before it has developed initial set, adjacent to the drip-stone or the frame of open-mouth or grate-top inlets, respectively. The edge of the blocks adjacent to the inlet structure shall be flush with the latter, from which the exposed surface of the blocks shall slope uniformly upward at a rate not to exceed 1-3/4 inches per foot to meet the finished surface of the new pavement. Joints shall not exceed ½ inch in width and shall be filled with 1:2 Portland cement grout.

The cost of this smooth dressed granite block pavement shall be included in the price bid for sheet asphalt or bituminous concrete pavement.

3.1.6.1.10 Rail Channel Filler: After the completion of the concrete base in a railway truck area and prior to the construction of sheet asphalt, bituminous concrete, granite block or vitrified brick pavement, rail channel filler shall be applied in the space under the head of the rail on both sides of the web, down to the sur face of the concrete base.

Rail channel filler shall consist of a mixture of one pa r t of Portland cement to two parts of Type A sand made into a stiff but plastic mortar.

The complete removal of existing old rail channel filler encountered in repaving operations, or the chipping to neat line of rail, shall be included in the price bid for the repaving.

3.1.6.1.11 Header Curbing: When indicated in the proposal or shown on the plan, concrete header curbing shall be constructed as an integral part of the concrete base. The composition shall be 1:1.5:3 air-entrained concrete, using No. 2A or 2B coarse aggregate including crushed stone, gravel or crushed gravel. Concrete for header curbing shall be placed within 45 minutes after placing the base course concrete, shall be floated to a dense, smooth finish and both edges rounded s lightly with an edging tool. Payment shall be a t the price bid per linear foot.

3.1.6.1.12 Cold Weather Concreting: Concrete shall be poured only upon a subgrade completely free from frost. Concrete to be placed a t an air temperature of 35 degrees F. or lower shall contain calcium chloride in the amount of two pounds per bag of cement; and under such conditions, or with air temperature up to 40 degrees F., the temperature of concrete at the time of placing shall be not less than 60 degrees nor more than 90 degrees F.

When directed by the Engineer, the concrete shall be covered with salt hay six inches in depth for protection against anticipated temperatures of 35 degrees F. or less. Payment for furnishing and placing salt hay will be at the contingent price per square yard.

3.1.6.1.13 Deficiency in Thickness: For the verification of the average thickness and total quantity of concrete placed, the Contractor shall provide the Engineer with a carbon copy of each original de livery ticket accompanying loads of central mixed concrete for each day's pour; or equivalent information covering size and number of batches for job-mixed concrete, for comparison in each case with the computed requirements.

When a deficiency of more than three percent but less than six percent in the required amount of concrete is found to exist in any one or more days' pours, the amount of such deficiency in cubic yards shall be calculated and a deduction shall be made from the amount otherwise due the Contractor equal to the deficiency in cubic yards multiplied by the price bid for furnishing and placing concrete, including subgrading, when subgrading is included in the unit price for concrete; or, for repaving, a deduction equal to the price bid for furnishing and placing concrete base, plus an additional 30%. When a deficiency greater than six percent is found to exist in any one or more days' pours, the thickness of concrete base in such areas shall be determined by means of cores drilled at locations as directed by the Engineer and the thickness of such cores shall be determined in accordance with the procedure of ASTM Method C-174. When a deficiency in specified thickness equal to or granter than ½ inch is found to exist, then additional cores shall be drilled, as directed, to determine the limits of the deficient thickness and the Contractor shall remove and replace, at his own expense, all concrete found to be deficient in thickness by ½ inch or more, including any surface course which may have been placed by him.

Supplementing the above procedure, the City reserves the right to drill cores from any project prior to the date of its final acceptance and, in the event of finding any deficiencies in thickness amounting to ½ inch or more, to determine the limits of the area of deficient thickness, after which the Contractor shall remove and replace such area s, together with any surface course pavement which may have been placed by him, at his own expense.

3.1.6.1.14 Protection from Traffic: The Contractor shall exclude traffic from the completed concrete base course by the placing of suitable barricades, red lanterns or torches and by providing a watchman during the periods when no work is in process, traffic required for the completion of the surface course of the pavement, or at street intersections for the needs of the public, shall not be permitted on the concrete base until it has attained sufficient strength in the judgment of the Engineer, or, in any event, until the last bid concrete is three days old; except that high-early strength concrete may, under favorable temperature conditions, be opened to traffic 24 hours after placing.

3.1.6.2 Macadam Base Course

3.1.6.2.1 Description: Macadam base course shall consist of compacted water-bound coarse aggregate on a bed of one inch of screenings, with 3 combined thickness of six inches after final compression (unless otherwise specified) constructed on the prepared subgrade.

3.1.6.2.2 Materials: The screenings for use in the one inch bed shall consist of crushed stone, crushed gravel or crushed slag complying with the respective quality requirements of 3.1.3 and the gradation requirements for screenings in Table No.1. Screenings for filling voids in the coarse aggregate shall consist of crushed stone or crushed slag, meeting the same requirements, and shall have satisfactory binding quality.

Coarse aggregate shall consist of crushed stone or cru shed slag meeting the quality requirements of 3.1.3 and the grading requirements for Size No. 4-A or 4-B in Table No. 2.

3.1.6.2.3 Shoulders: When the macadam base will be in contact with an earth shoulder on either or both sides, the edge of the shoulder shall be cut vertically, so as to form a box to retain the coarse aggregate. The shoulder shall be left sufficiently higher than the required surface of the coarse aggregate so that, in the initial rolling of the aggregate, the roller wheel shall overlap the shoulder and compress it flush with the surface of the compressed aggregate.

The price bid for macadam base course shall include the shaping of shoulders between curb lines or other limits as may be indicated on the plans.

3.1.6.2.4 Spreading Aggregate: Upon the prepared subgrade a bed of screenings shall be spread and rolled lightly so as to have a thickness of

approximately 1 inch. Upon this bed, blocks having a thickness equal to that of the required loose depth of coarse aggregate shall be placed. Blocks shall be located at the sides of the base course, at the crown, and at the quarter points and longitudinally at intervals of 25 feet. The coarse aggregate may be spread from approved stone spreaders or directly from trucks. After spreading, the aggregate shall be brought to the required grade and cross-section flush with the tops of the blocks, with all irregularities corrected before rolling begins.

3.1.6.2.5 Compaction: Rolling shall be accomplished by a three wheel power roller weighing not less than 10 tons, except that tandem rollers weighing not less than 8 tons may be employed provided coarse aggregate is laid in two layers of equal depth, rolled separately; or an approved mechanical vibrating and compacting device may be used instead of a roller.

Rolling shall begin at the side and progress toward the crown of the road. The rolling shall be paralle1 to the center line of the roadway, uniformly lapping each preceding track, covering the entire surface with the rear wheels, and continuing until the material does not creep or wave ahead of the roller wheels.

Irregularities in the surface which develop during the compacting process shall be corrected by loosening the compacted aggregate and bringing the surface to the proper cross-section and grade. If, at any time, subgrade material becomes churned up or mixed with the coarse aggregate, the Contractor shall dig out and remove the mixture, res tore the subgrade to a firm and satisfactory condition, replace the stone and recompact the area.

3.1.6.2.6 Application of Screenings: The screenings shall be spread either with shovels from piles along the side of the road or direct from approved spreaders or trucks, but in no ca se shall the screenings be deposited in piles upon the previously prepared base course. Rolling of the surface shall continue during the spreading of the screenings.

Screenings are to be spread upon the coarse aggregate in such manner as to result in a uniform filling of the voids and the work of spreading shall be supplemented by brooming by hand or by the use of a broom attached to the roller.

Compaction shall begin at the sides and progress toward the crown, using the same procedure as for coarse aggregate. Additional screenings shall be applied during this part of the operation as bare spots appear on the surface. Rolling and screening shall continue until all voids are filled and the surface of the base presents a uniform appearance. After the completion of the dry screening operation, the surface shall be sprinkled with water and rolling continued. The sprinkler for this purpose shall be mounted on a motor driven chassis equipped with pneumatic tires. An approved spray may also be used, provided the quantity of water and pressure are sufficient to flush the screenings down into the voids of

the course aggregate. In no event, however, shall the quantity of water applied be sufficient to result in undue softening of the subgrade.

The sprinkling and rolling shall be continued and additional screenings applied as necessary until all the voids are filled and until a slight wave of excess water and screenings forms a grout in front of the roller wheels. Hand brooming shall be used to sweep the wet screenings into the un-filled voids and distribute them evenly. The base shall then be left to dry.

Areas inaccessible to the roller shall be tamped by hand- tamping until thoroughly and satisfactorily compacted.

3.1.6.2.7 Required Surface Condition: When a bituminous pavement is to be laid on the completed macadam base course the final surface of base course shall be slightly rough and mosaic with no layer of screenings remaining on the surface of the stone. For this purpose, the surface of the base course shall be swept in such manner as to remove surplus screenings without disturbing the coarse aggregate.

3.1.6.2.8 Testing Surface of Base Course: After the base course has been completed the surface shall be checked in order to determine the presence of depressions or irregularities irregulari ties of more than 3/8 inch shall be corrected by loosening the surface and removing or adding material as may be required, after which the entire area shall be recompacted satisfactorily.

3.1.6.3 Bituminous Macadam Base Course.

3.1.6.3.1 Description: Bituminous macadam base course shall be constructed on the prepared subgrade and shall consist of compacted coarse aggregate, on a bed of one inch of screenings, with a combined thickness of six inches after final compression. The bituminous cement shall be applied by the penetration method.

3.1.6.3.2 Materials: Screenings for use in the one-inch bed shall consist of crushed stone, or crushed slag or crushed grovel complying with the respective quality requirements of 3.1.3 and the gradation requirements for screenings in Table No. l.

Coarse aggregate shall be crushed stone or crushed slab meeting the quality requirements of 3.1.3. Coarse aggregate for bottom course and intermediate or choke aggregate shall meet the respective requirements for No. 4-A or 4-B and No.2-A in Table No. 2.

Asphalt cement (85-100 penetration) shall meet the requirements of 3.1.3. Refined coal tar or water gas tar cement shall meet the requirements of ASTM Specification D-490 for Grade RT-12.

3.1.6.3.3 Shoulders' Construction and shaping of shoulders shall be as specified in 3.1.6.

3.1.6.3.4 Spreading Aggregates and Rolling: The bed of screenings and coarse aggregate shall be spread and rolled as specified in 3.1.6 and 3.1.6.

The final surface texture of the compacted course aggregate shall be such a s to permit of uniform penetration of the bituminous cement. Pockets of either segregated fine or concrete materials shall be removed and replaced with aggregate of satisfactory gradation and re-rolled, prior to the application of then bituminous cement.

3.1.6.3.5 Application of Bituminous Cement: The bituminous cement shall be applied only when the coarse aggregate is dry throughout and when the air temperature is 40 deg. F. or higher. Application shall be by means of an approved pressure distributor a t a pressure between 25 and 50 pounds per square inch, as may be directed.

The temperature of the bituminous cement at the time of application shall be as follows: For asphaltic cement, between 225 and 325 deg. F.; for coal tar or water gas tar cement, between 175 and 250 deg. F., as may be directed.

The bituminous cement shall be applied uniformly at a rate of two and one-half gallons (as determined at the temperature of application) per square yard of aggregate surface.

In order to insure uniformity at the junction of two applications, when the volume of the application starts to decrease the distributor shall be shut off. Before starting the next application, building pa per shall be spread over the latter part of the previous application and the distributor shall lap back over this paper sufficiently to result in a full application when the untreated aggregate is reached. Ti1e building paper shall then be removed and destroyed.

Hand pouring, if permitted on small, irregular or other areas inaccessible to the pressure distributor, shall be done with pouring pots of approved design.

3.1.6.3.6 Spreading Choke Aggregate and Rolling: Spreading of choke aggregate (size No. 2-A) shall begin immediately after the application of the bituminous cement, while the latter is still warm. Spreading of this aggregate may be either by hand from piles placed adjacent to the bituminous macadam base, or spreading may be clone mechanically, provided the spreading equipment is so operated as to distribute the aggregate over the surface in advance of the passage of the wheels.

The amount of No. 2-A aggregate to be spread on the base shall be just sufficient to fill all voids and to prevent adhesion of the roller wheels to the bituminous treated base.

Rolling shall begin immediately when the spreading of the No. 2-A aggregate has progressed sufficiently to permit of proper opera t ion. Rolling shall start at the sides, with over lapping longitudinal paths, as specified for base course aggregate and shall continue until the No. 2-A aggregate is properly embedded, but not so long as to cause excessive crushing of the latter. Bare spots which ma y develop during the progress of the rolling shall be covered either by the use of additional No. 2-A aggregate or by brooming any excess of the latter from area s where the coarse aggregate would be covered with a comple te layer of choke aggregate after the rolling is completed.

3.1.6.3.7 Protection of Completed Base: Barricades shall be placed and a watchman maintained at the site for the exclusion of all traffic prior to beginning the construction of the bituminous surface course.

3.1.7 Sheet Asphalt Pavement.

3.1.7.1 Description: This pavement shall consist of an asphaltic concrete binder course· inches in thickness and a sheet asphalt surface course 1 inch in thickness, unless otherwise specified or indicated on the plans, to be constructed on the prepared base course. The thickness shall be determined after final compaction.

3.1.7.2 Materials: The materials shall conform to the following requirements:

Asphalt Cement. Asphalt cement shall conform with the quality requirements of Paragraph 11-33 and shall have a penetration of 60-70 unless otherwise specified. The Engineer reserves the right, upon adequate advance notice to the Contractor, to designate either 50-60 or 60-70 penetration, according to anticipated traffic conditions.

Fine Aggregate: Fine aggregate shall conform to the quality and gradation requirements for Type C as given in 3.1.3 and Gradation Table No. 1. Type C-1 natural sand shall be used for sheet asphalt surface course. Either Type C-1 or C-2 fine aggregate may be used for asphaltic concrete binder course. When Type C-2 is used (consisting of a mixture of not less than 50 percent of C-1 natural sand with crushed stone screenings or crushed gravel screenings) the pa vi ng plant procedure shall be such as to produce a uniform mixture and only that portion of the product which passes a No. 8 laboratory sieve shall be considered as fine aggregate.

During actual plant operation gradations of fine aggregate shall be determined on samples taken after drying and screening through the asphalt plant.

Course aggregate. Coarse aggregate f or binder course shall meet quality requirements for crushed stone or crushed grovel in 3.1.3 and gradation requirements for Size No. 2-A or 2-B in Table No. 2, as directed by the Engineer.

Mineral Filler. Mineral filler shall consist of pulverized stone dust or Portland cement meeting the quality and grading requirements of 3.1.3 and Table No. 1.

3.1.7.3 Paving Plant Requirements: The general design, aggrangement and capacity of the several parts of the asphalt mixing plant shall be such as to insure an output of uniform character, within the limits given in these specifications, during steady operation.

Asphalt mixing plants shall be subject to inspection and approval before initial operation. The asphalt plant operator shall supply the necessary laboratory sieves and scales required for gradation test on fine and coarse aggregates.

3.1.7.4 Heating Asphalt, Tanks for storage of asphalt shall be equipped for heating the material, under effective and positive control at all times, to the temperature requirements of these specifications. Heating shall be accomplished by steam coils, electricity or other means such that no flame shall come in contact with the heating tank.

All pipe lines exposed to the outside atmosphere shall be insulated.

3.1.7.5 Feeding Aggregates. Provision for uniform feeding of aggregates is required in order to insure proper temperature control. When two aggregates with overlapping gradations are to be used simultaneously the plant shall be provided with positive means for control of the proportions in which each aggregate is fed to the dryer, unless thorough premixing of the aggregates in the required proportions is provided before drying.

3.1.7.6 Dryer A rotary dryer of any satisfactory design for drying and heating the mineral aggregate shall be provided. The dryer shall be capable of heating the mineral aggregate to the required temperatures during normal operations.

3.1.7.7 Screens. Plant screens shall be capable of screening all aggregates to the sizes required for proportioning and shall have normal capacities slightly in excess of the full capacity of the mixer.

For the fine aggregate bin, the screen shall have openings equivalent to a No.8 laboratory sieve; for the next adjoining bin, the openings shall be equivalent to a ½ inch square laboratory screen, except that a smaller, intermediate screen size may be used over the second bin in a four bin plant.

3.1.7.8 Bins. Mixing plants shall have at least three bins for the separate storage of three sizes of mineral aggregates after screening. Each bin shall be provided with an overflow pipe or other approved means for preventing backing up of material from one bin into another. Separate dry storage shall be provided for mineral filler,

3.1.7.9 Scales. Scales for any weigh box or hopper shall be either of the beam or springless dial type, of a standard make and design and sensitive to one-half of

1% of the maximum load that may be required. When a beam type scale is used it shall be equipped with a tare beam for balancing the hopper and a telltale device to indicate at least the last 200 pounds of load. Adequate standard test weights shall be available for checking the accuracy.

3.1.7.10 Temperature Controls. The temperature of the asphaltic cement shall be indicated or automatically recorded at the storage tanks or in the pipe line to the mixer. An electric pyrometer or other approved thermostatic instrument shall be placed at the discharge chute of the dryer to indicate or record the temperature of the heated aggregate at that point.

3.1.7.11 Bitumen Bucket. The bitumen bucket shall have ca pa city of not less than 15 per cent of the rated ca pa city of the mixer. The scales (either springless dial or beam type) sha11 conform to the requirements for aggregate scales except that the tell ta le device on beam scales shall indicate not less than the last 20 pounds. Beam- type scales shall be equipped with a tare beam f or balancing the bucket and compensating for accumulated bitumen in the bucket. The asphalt bucket shall be so arranged a s to distribute the bitumen uniformly across the full width of the mixer.

3.1.7.12 Mixer. The mixer shall be a batch mixer of twin pugmill or other approved rotary type. The number, size and arrangement of blades and the rate of revolution shall be such a s to mix and circulate the batch around the perimeter of the mixer and to produce a mixture in which the bitumen is distributed uniformly throughou t. The capacity of the mixer shall be not less than 2000 pounds.

3.1.7.13 Temperature of Materials: Asphaltic cement shall be brought to and maintained at a temperature of 250° to 325° F. Mineral aggregates for binder course shall be a t temperature between 2500 and 3250° F., and sand for sheet asphalt surface course at a temperature between 275° and 375° F., in both cases, as determined at the mixer. However, the Engineer reserves the right to prescribe closer temperature ranges of approximately 50° F., within the broader limits specified, in order to meet the requirements of weather conditions, length of haul and character of mixture.

3.1.7.14 Preparation and Composition of Mixtures: The asphalt cement, hot aggregates and mineral filler shall be Weighed separately and accurately at the mixer. Hot asphaltic cement may also be measured by a n approved metering device. The time of mixing shall be sufficient to distribute the bitumen uniformly throughout the mixtures and to coat the surface of all particles properly, without resulting in an excessive hardening of the bitumen. Binder course materials shall be mixed for not less than 30 nor more than 45 seconds after the complete discharge of the asphaltic cement into the mixer. Sheet asphalt surface material shall be mixed not less than 45 nor more than 60 seconds after pre-mixing fine aggregate and filler and the complete discharge of the asphalt cement.

The composition of the completed binder course and surface course mixtures shall conform to the following limits by weight, within which the Engineer reserves the right to vary the proportions of aggregates, filler and bitumen as deemed necessary:

COMPOSITION OF MIXTURES

(Total Percentages by Weight Passing Each Sieve)

	Binder	Surface Course
1-1/4”	100	
1”	90-100	
½”	40-75	
No. 8	16-30	100
No. 10		95-100
No. 40		55-85
No. 80		24-45
No. 200		10-16
Bitumen (% of Total Mix)	4.0-0.0	9.0-11.5

3.1.7.15 Paving Plant Inspection: For the verification of weights or proportions and character of materials and determination of temperatures used in the proport ion of the mixtures the Engineer or his authorized representatives shall have access at any time to all parts of the paving plant.

3.1.7.16 Transportation and Temperature of Mixtures: The asphalt mixtures shall be hauled to the work in tight vehicles, previously cleaned of all foreign material. if a mixture of water and oil is used to prevent adhesion to the truck body, the quantity shall be no more than a surface film. Approved covers of sufficient size shall be provided to protect the entire load Vehicles shall be insula ted to insure that the mixtures are delivered to proper working temperatures.

The binder mixture shall be at a temperature of 225 deg. F. to 300 deg. F. and sheet asphalt surface mixture at a temperature of 250 deg. F. to 325 deg. F., as delivered on the work.

3.1.7.17 Base and Weather Conditions: Prior to laying binder course mixture, the prepared base shall be cleaned of all loose and foreign materials. During the placing of binder or surface courses, the base (or binder course) shall be either dry or at least free from standing water and the weather conditions shall be suitable

for the laying of a thoroughly compacted pavement, having a proper cross section and surface finish.

3.1.7.18 Conditions for Use of Machine and Hand Spreading: Either ma chine or hand spreading of asphalt concrete and sheet asphalt surface mixtures will be acceptable under this specification. However, when the size of the project or the urgency for its completion warrants the use of machine spreading, the Engineer reserves the right to require the use of a spreading machine by the Contractor.

In the laying of narrow lanes adjacent to lanes of normal width, in the wings of street intersections or other irregular areas and in areas where the depth of new pavement will be variable, it will be permissible to use hand spreading and raking in conjunction with machine spreading and finishing. In all such cases, the requirements for hand spreading shall be fully complied with; except that in lieu of steel dump plates as hereinafter specified, the asphalt mixture may be carried direct from the hopper of the ma chine to the point of deposit or otherwise dumped in piles outside of the areas on which it is to be spread and raked.

3.1.7.19 Spreading and Finishing Machine: This equipment shall be an approved self-powered and self-propelled mechanical finishing machine capable of spreading and finishing the mixtures true to line, grade and cross sect ion.

The term "screed" includes any device for cutting, crowding, or other practical action which is effective on the mixtures at specified working temperatures and which will produce a surface of proper texture, without tea ring, shoving or gouging. For this purpose the screed shall be equipped with a heating device which shall be used when necessary. The rate of operation of machine, within limits of 10 to 20 feet per minute, shall be acceptable to the Engineer from the standpoint of a dense, properly laid mixture having the desired surface texture.

3.1.7.20 Machine Spreading -Binder: Immediately after the passage of the spreading machine the surface of the binder shall be tested longitudinally with a long-handled straight edge not less than 10 feet in length and irregularities shall be corrected at once by loosening with hand rakes and removing excess material or supplying material where a deficiency exists. Exposed edges of lanes shall be vertical and regular in alignment and grade. Excess material (either in alignment or depth) shall be removed at once and deficiencies corrected. Accumulations of fatty material dropping from the screed shall be removed before the first passage of the roller.

Where hand spreading is required adjacent to a machine-laid la ne, the mixture a long the joint shall be carefully set up with the back of the rake and raked to required height so that, after compaction by the roller, the hand raked area will conform accurately to the surface of the adjoining ma chine-laid material.

Fatty spots developing in the binder course, either after the screeding or first rolling, shall be removed promptly and replaced with material of proper composition.

3.1.7.21 Compacting Binder Courses: Compaction shall be by a power driven tandem roller having a gross weight of not less than eight tons and the weight per inch width of tread of not less than 200 pounds. The speed of the roller shall not exceed three miles per hour and shall at all times be slow enough to avoid displacement of the hot mixtures.

The Contractor shall provide a separate roller for each 30 tons of binder mixture (or fractional part thereof) delivered to the work per hour and the area of binder laid per hour per roller shall not exceed 400 square yard s. To prevent adhesion of the asphalt mixture to the roller, the wheels shall be kept well moistened, but an excess of either water or oil will not be permitted.

Each course shall be rolled as soon after being placed as it will bear the passage of the roller without undue displacement or hair cracking. Rolling shall start longitudinally at the sides and proceed toward the center of the pavement, over lapping on successive trips by at least one-half the width of the roller. Alternate trips of the roller shall be of slightly different lengths. The pavement shall be subjected to diagonal rollings in two directions and, when the width of the pavement permits, it shall also be rolled at right angles to the center line.

Any displacement resulting from reversing the direction of the roller or from other causes shall be corrected at once by the use of rakes and fresh mixture when required.

At all places not accessible to the roller the binder course shall be compacted by hot tampers weighing not less than 25 pounds.

The completed binder course mixture shall show a uniform distribution of coarse and fine aggregate sizes and shall be dense, but with sufficient surface voids to permit a complete bond between a clean binder course and the sheet asphalt surface mixture. For this purpose, the binder course shall be cleaned before laying surface mixture and any material which is coated with dirt, or which has become broken, or otherwise defective, shall be removed and replaced with satisfactory binder mixture.

3.1.7.22 Relative Process of Binder and Surface Courses: The binder course shall be kept as clean and free from traffic as possible before covering with surface course mixture.

In no event shall more binder course be laid at any one time than can be covered by one day's run of the paving plant on surface mixture. When however, urgent requirements of traffic or conditions of exposure of the completed binder to dust, dirt or other foreign material make it desirable to cover the binder with surface

mixture within the same day's work, the Engineer reserves the right to direct that substantially all binder mix shall be so covered.

3.1.7.23 Machine Spreading and Rolling – Surface Mixture: In the laying of the sheet asphalt surface course, the equipment and construction procedure shall conform in all respects to the requirements of Paragraphs 3.1.6 and 3.1.6 for binder course, except that the amount of surface mixture delivered to the job per hour for each roller shall not exceed 15 tons and the area of surface mixture laid per hour for each roller shall not exceed 250 square yards.

Contact surfaces of curbs, manholes, headers or other structures shall be painted lightly but evenly with hot asphalt cement, asphalt cement cutback with naphtha or asphalt emulsion prior to laying surface mixture. At these locations the asphalt surface shall be finished slightly higher (approximately one-sixteenth of an inch) than the elevation of the edge of the structure which it meet s.

At locations inaccessible to the roller, and along curbs, gutters, railway tracks and around manholes compaction shall be effected by hot tampers and the joints shall be carefully sealed.

Compaction of the surface mixture shall continue until all roller marks have been eliminated and until the density, as determined upon samples cut from the finished pavement, shall equal a t least 92% of a voidless mix (corresponding to a specific gravity of approximately 2.1), all finished rolling of surface mixture shall be completed in daylight hours, un less artificial light satisfactory to the Engineer is provided.

3.1.7.24 Joints: In laying the binder and surface courses the number of transverse and longitudinal joints shall be a s few a s practicable. In all cases these joints shall be even, well-bonded, thoroughly compacted and tightly sealed.

Placing of the asphalt mixtures shall be as nearly continuous as possible, and the roller shall pass over the unprotected end or edge of the freshly laid mixture only when the laying of this course is to be discontinued for such length of time as would permit the mixture to become chilled. In all such cases, including the formation of joints at the end of a day's work, except when a rope joint is used, provision shall be made for proper bond with new binder or surface mixture by cutting or trimming back the joints, so as to expose an unsealed or granular surface for the full specified depth of the course. When the laying of surface mixture is resumed the exposed edge of the joint shall be painted with a thin uniform coat of bitumen and the fresh mixture shall be raked against the joint, thoroughly tamped with hot tampers and rolled. Hot smoothing irons may be used for sealing joints, but in such ca se extreme care shall be exercised to avoid burning the surface.

3.1.7.25 Hand Laying of Asphalt Mixtures: In hand laying of asphalt mixtures, the binder and surface course materials are to be dumped upon steal dumping plates and then distributed into place with hot shovels and hot rakes. The surface mixture shall be raked to a uniform degree of looseness throughout its full depth. The shovelers shall distribute the mixtures no faster than the rakers can proceed with proper raking and rakers shall not stand or walk in the freshly raked surface mixture, unless required for the pu rpose of ma king corrections in the surface.

Immediately after raking and prior to the first rolling, a long-handled lute with a six foot straight edge, shall be used to check and level off the surface mixture. After the initial rolling the entire surface sha11 be straight-edged as previously specified and all inequalities resulting from the raking or rolling shall be corrected at once.

In all other respects the procedures set forth in 3.1.7.9 to 3.1.7.14 shall be fully complied with except that output per roller hour shall not exceed 250 and 150 square yards respectively for binder and surface courses. The quality of the resulting pavement shall be the same.

3.1.7.26 Protection of Finished Pavement: Vehicular traffic shall be excluded from the newly complete pavement until it has coo led to approximate atmospheric temperature.

3.1.8 Bituminous Hot-Mix

3.1.8.1 Description: This pavement shall consist of a binder course one and one-quarter inch in thickness and asphalt concrete surface course three-fourth of an inch in thickness, unless otherwise specified or indicated on the plans, to be constructed on the prepared base. The thicknesses shall be determined after final compaction.

3.1.8.2 Materials: The materials shall conform to the following requirements:

Asphalt Cement. Asphalt cement shall conform with the quality requirements of paragraph 3.1.3 and shall have a penetration of 85-100 unless otherwise specified.

Fine Aggregate. Fine aggregate shall conform to the quality and gradation requirements for Type C-1 or Type C-2 for both binder and surface courses. When Type C-2 is used (consisting of a mixture of not less than 50% of natural sand with crushed stone screenings or crushed gravel screenings) the paving plant procedure shall be such as to produce a uniform mixture and only that portion of the product which passes a No. 8 laboratory sieve shall be considered as fine aggregate. During the period between April l and October 11 Type E (crushed stone mix bituminous conform to the or gravel) fine aggregate may be used in the preparation of hot- concrete binder or surface course, provided the resulting mixtures appropriate grading and composition requirements.

During actual plant operation gradations of fine aggregate shall be determined from samples taken after drying and screening through the asphalt plant.

Coarse Aggregate. Coarse aggregate for binder and surface course shall meet quality requirements for crushed stone or crushed gravel in paragraph 3.1.3. Binder coarse aggregate shall conform to gradation requirements for size No. 2-A or 2-·B in Table No .2, as directed by the Engineer.

Coarse aggregate for surface course mixture shall consist of crushed stone or crushed gravel meeting the grading requirements for size No. l in Table No. 2.

Since a portion of the coarse aggregate for binder and sur-face course mixtures will be derived from screenings or Typo C-2 fine aggregate materials, when used, the simultaneous feed of fine aggregate and coarse aggregates are the cold elevator shall be positively controlled for the purpose of uniformity of mix.

Mineral Filler. Mineral filler shall comply with the quality and gradation requirements of 3.1.3 and Gradation Table No.1. The amount of mineral filler required in order to produce the designated amount of minus 200 mosh material in the completed surface course mixture shall be arrived at upon the basis of the amount of minus 200 mesh material contained in the fine aggregate after drying and screening through the paving plant.

3.1.8.3 Paving Plant Requirements: The asphalt mixing plant shall conform to the requirements of Paragraphs 3.1.6 and 3.1.6 Sheet Asphalt Pavement.

3.1.8.4 Temperature of Materials: Asphalt cement shall be brought to and maintained at a temperature of 250 deg. to 325 deg. F. Mineral aggregate for binder course shall be at a temperature between 250 deg. and 325 deg. F. and aggregates for asphalt concrete surface course at a temperature between 275 deg. and 350 deg. F., in both cases as determined at the mixer. However, the Engineer reserves the right to designate temperature ranges of approximately 50 deg. F., within the broader limits specified, in order to meet the requirements of weather conditions, length of haul and character of mixtures.

3.1.8.5 Preparation of Composition of Mixtures: The requirements for preparation of binder and asphalt concrete surface mixtures shall be as set forth for binder and sheet asphalt surface mixtures respectively in 3.1.3, Sheet Asphalt Pavement.

The composition of the completed binder and asphalt concrete surface mixtures shall conform to the following limits, by weight, within which the Engineer reserves the right to vary the proportions of aggregates, filler and bitumen, as deemed necessary:

Composition of Mixtures

Total Percentages by Weight Passing Each Sieve

	Binder	Surface Course
1-1/4”	100	
1”	90-100	
½”	40-75	100
No. 4		50-80
No. 8	16-30	45-62
No. 40		12-45
No. 80		8-21
No. 200		5-8
Bitumen (% of Total Mix)	4.0-6.0	5.5-8.5

3.1.8.6 Transportation and Temperature of Mixtures: The asphalt mixtures shall be hauled to the work in tight vehicles, previously cleaned of all foreign material. If a mixture of water and oil is to be used to prevent adhesion to the truck body, the quantity shall be no more than a surface film. Approved covers of sufficient size shall be provided to protect the entire load. Vehicles shall be insulated to insure that the mixtures are delivered at proper working temperatures. The binder mixture shall be at a temperature of 225 deg. To 300 deg. F, and asphalt concrete surface mixture at a temperature of 250 deg. to 325 deg. F., as delivered to the work.

3.1.8.7 Base and Weather Conditions: Prior to laying binder course mix-tire, the prepared base shall be cleaned of all loose and foreign materials. During the placing of binder or surface course, the base (or binder course) shall be either dry or at least free from standing water and the weather conditions shall be suitable for the laying of a thoroughly compacted pavement, having a proper cross section of surface finish.

3.1.8.8 Spreading, Rolling, and Finishing: Either machine or hand spreading of binder and asphalt concrete surface mixtures will be acceptable under this specification and the requirements of 3.1.6through 3.1.6, inclusive, for Sheet Asphalt Pavement shall govern the spreading, rolling, rate of progress, construction joints and all other details required for the laying of a two-course, hot mix, asphalt concrete pavement.

3.1.8 Bituminous Concrete (Cold-Mix)

3.1.9.1 Description: This pavement shall consist of an asphalt concrete binder course 1-1/4” in thickness and a surface course ¾” in thickness to be constructed

on the prepared base course. The thicknesses shall be determined after final compaction.

3.1.9.2 Materials:

Asphalt Cement. This material shall be either (1) Asphalt cement 85 to 100 penetration, unless otherwise specified, conforming with the quality requirements of 11-33; or, (2) cut-back emulsified asphalt conforming to the requirements of 3.1.3.

Fine aggregate. The fine aggregate for bot tom and surface courses shall be crushed stone screenings or crushed gravel screenings conforming to the respective quality and gradation requirements of 3.1.3. and Table No. l; except that only that portion of the product which passes a No. 8 laboratory sieve shall be considered as fine aggregate in establishing the composition of the mixture.

During actual plant opera t ions gradations of final aggregate shall be determined upon samples taken after screening through the asphalt plant.

Coarse Aggregate. Coarse aggregates for bot tom and surface courses shall meet quality requirements for crushed stone or crushed gravel in 3.1.3. Coarse aggregate for bottom course shall conform to gradation requirements for size No. 2-A or 2-B, as directed by the Engineer and coarse aggregate for surface course mixture shall conform to gradation requirements for size No. 1 in Table No. 2.

Compliance with gradation requirements shall, in general be based upon samples taken after drying and screening through the asphalt plant.

Since a portion of the coarse aggregates for bottom and surface course mixtures will be derived from the fine aggregate material, the simulta neous feeding of fine aggregate and coarse aggregates shall be controlled positively at the cold elevator for the purpose of uniformity of mix.

Liquefier. The liquefier shall be a petroleum naphtha conforming to the requirements of 3.1.3.

Hydrated Lime. Hydra ted lime shall be Masons' hydrate conforming to the requirement s of 3.1.3.

3.1.9.3 Paving Plant Requirements: The asphalt mi xi ng plan t shall conform to the requirements of 3.1.3 and 3.1.3, Sheet Asphalt Pavement.

3.1.9.4 Temperature of Materials: The asphalt cement shall be brought to and maintained at a temperature between 250 deg. F. and 300 degrees F. The mineral aggregates, as determined at the mixer, shall be dry and at a temperature between 50 degrees F. and 125 degrees F.

3.1.9.5 Preparation of Mixtures: The asphalt cement or cut-back emulsified asphalt and the fine and coarse aggregates shall be weighed separately and

accurately. Either asphalt product may also be measured by an approved metering device. Naphtha and hydrated lime ma y be measured by volume on a volume-weight relationship basis. The ingredients shall be placed in the mixer in the following order: when using hot asphalt cement and naphtha, first, the coarse aggregate, after which the liquefier shall be sprayed over the stone, followed immediately by the asphalt cement, with sufficient time for the distribution of the latter before introducing the fine aggregate and lime. The total time of mix, depending upon the temperatures of the ingredients and the character of the bitumen and aggregates shall be sufficient to produce a mixture in which all particles are coated and the bitumen is distributed uniformly throughout.

3.1.9.6 Composition of Mixtures: The proportions of the several ingredients shall conform to the following general composition limits in percentages by weight of the entire mix:

3.1.10 COMPOSITION OF MIXTURES

3.1.10.1 (Percentages by Weight ofTotal)

	Bottom Course	Top Course
Coarse Aggregate	80-90	65-85
Fine Aggregate	5-15	10-25
Bitumen*	3.3-5.5	4.8-7.0
Hydrated Lime	0.5 – 1.0	0.5 – 1.0
Liquefier**	0.4 – 1.0	0.4 – 1.0

1.0* The quantity of cut-back emulsified asphalt (when used) will depend upon its composition and shall be sufficient to yield the same amount of bitumen (asphalt cement residue) a s shown in the above limits.

** When cut-back emulsified asphalt is used, the u se of liquefier will be omitted. In other respects, the sequence of mixing operations shall be the same as when hot asphalt cement is used.

3.1.10.2 Transportation and Temperature of Mixtures: The transportation of mixtures shall conform to the requirement s of subsection 3.1.6(i), Sheet Asphalt Pavement. The temperature of the mixture shall be between 50 deg. F, and 125 deg. F.

3.1.10.3 Base and Weather Conditions: Base and weather conditions shall conform to the requirements of 3.1.3.

3.1.10.4 Spreading, Rolling, and Finishing: The completed mixtures shall be such that they may be handled, placed and finished without stripping the asphalt material from the aggregate.

Either machine or hand spreading of binder and surf ace course mixtures will be acceptable under this specification and the requirements of 3.1.3 to 3.1.3, inclusive, governing spreading, rolling, rate of progress of binder and surface courses, construction of joints and other details shall apply except as hereinafter modified.

3.1.10.5 Curing of Mixtures: Adequate time shall be allowed between the laying of the binder and surface course mixtures to permit of the curing of the binder course.

When hot asphalt cement, with liquefier, is used, the top course material may be laid on the day following construction of binder course when weather conditions are favorable. When cut-back emulsified asphalt is used, the surface course material shall be placed on the third da y after the laying of bottom course material, provided weather conditions have been favorable for curing.

3.1.10.6 Surface Covering and Protection of New Pavement: A light, uniform covering of dry stone or gravel screenings shall be spread in sufficient quantity to fill the surface voids in the top course and rolled in.

All traffic shall be excluded from the completed pavement until the following day, when hot asphalt cement has been used; and until the second day after completion when cut-back emulsified asphalt has been used.

3.1.11 Asphalt Resurfacing – Cover and Stripping Methods (with Sheet Asphalt and Bituminous Concrete:

3.1.11.1 Description:

Asphalt resurfacing shall comprise the construction of a sheet asphalt or bituminous concrete pavement, as specified, upon a n existing pavement or an existing concrete barn.

Asphalt resurfacing work shall be performed under one of the following procedures, as specified:

Cover Method. After bringing sewer and water manhole frames and covers to the required new elevations, the existing pavement shall be used as a base for the new pavement.

Stripping Method. After stripping the existing sheet asphalt or other pavement from the existing concrete base, the now asphalt or bituminous concrete pavement shall be constructed on the existing base.

3.1.11.2 Thickness: Thee thickness after final compaction of the several types of pavement, unless otherwise specified or indicated on the plan, shall be as follows:

Cover Method. Sheet asphalt shall consist of one inch binder course, one inch surface course; Bituminous Concrete (hot mix) and Bituminous Concrete (cold mix): 1-1/4 inch binder course, 3/4 inch surface course.

Stripping Method. For the stripping method the thickness of the new pavement in all cases shall be one and one-half inch binder course, one inch surface course after compaction.

3.1.11.3 Resetting Manhole Frames: In resurfacing by the cover method, existing concrete base shall be removed as required to free the manhole casing.

The frame and cover shall be reset on neatly cut brick or concrete at the new elevation and cross slope and the excavation around the frame shall be filled with 1:2:4 high-early concrete (No.2-13 coarse aggregate) flush with the adjacent paving at the outside edges and two inches below the frame at the casting.

In resurfacing by the stripping method, the elevation and cross-slope of manhole frames and covers shall be adjusted (as required) to turn surface of the proposed new pavement, using the same procedure as in the covering method,

The cost of all labor and materials including concrete required for resetting existing sewer and water manhole frames and covers shall be included in the price bid for resurfacing by the cover or stripping method.

Defective castings shall be removed when directed by the Engineer and new frames and covers shall be furnished and set by the Contractor, when so directed at the respective unit prices bid in the proposal.

Public utility manhole frames in the resurfacing area will be reset by the utility company or by the Contractor at the expense of the utility company when so ordered and agreed upon between the Contractor and the utility company.

3.1.11.4 Dripstones: Inlet dripstones in satisfactory condition shall not be replaced, but shall be reset as required on a 1:3 mortar bed. Defective dripstones shall be removed and replaced when directed by the Engineer and payment shall be made to the Contractor at the price bid for the item.

3.1.11.5 Special Adjustments (Cover Method): The easement from the elevation of the now pavement to the elevation of abutting old pavements shall be made by special adjustments at street intersections within the limits of the new work and elsewhere, under special conditions, as directed by the Engineer. The procedure shall be in accordance with one of the following methods:

Sheet Asphalt. When a special adjustment is to be made in an existing sheet asphalt or other bituminous pavement, the old asphalt pavement shall be removed

from the base within the limits directed, as required for a satisfactory easement between the adjoining old pavement and the proposed new pavement; after which binder course mixture shall be placed so that, after compaction, it shall be flush with the existing old asphalt at the inner edge of the excavated area and two inches below the top of the existing abutting pavement at the outer edge of the excavation. (See Standard Drawing No .L-751 of the Department of Streets.)

Granite Block or Vitrified Brick. When a special adjustment is to be made in an existing granite block or brick pavement, the block or brick shall be removed and disposed of and the cushion excavated to a total depth below existing street surface not to exceed 7 inches, within the limits directed. The excavated area shall be filled with 1:2:4 high early concrete (No .2-13 coarse aggregate) so that the concrete shall be flush with the top of the existing block or brick pavement at the inner edge of the excavation and two inches below the top of the existing abutting pavement at the outer edge of the excavation. (See Standard Drawing No. L-751 of the Department of Streets.)

3.1.11.6 Basis of Payment: The price bid for Special Asphalt Adjustment shall include the cost of removing and disposing of the old asphalt in the cut-out area and furnishing and placing binder course mixture as hereinbefore specified.

The price bid for Special Block or Brick Adjustment shall include the removal and disposal of block or brick and cushion in the excavated area and the furnishing and placing of 1:2:4 high early concrete as a base in the same area.

3.1.11.7 Adjustments Adjacent to Inlets (Cover Method): Asphalt pavement adjacent to an inlet shall be removed from the base for a width of four feet around the inlet. Binder course material shall be placed in the cut-out area and brought to an elevation after completion of two inches below the proposed new pavement surface.

Granite block or vitrified brick pavement adjacent to an inlet, together with the cushion material, shall be removed and disposed of for a width of four feet around the inlet and to a depth not to exceed seven inches below the old pavement or inlet level. High early 1:2:4 concrete (No. 2-B coarse aggregate) shall be placed in the excavated area in the same manner as specified for special block or brick adjustment.

The cost of all labor and materials required f or adjustments to be made around inlets shall be included in the price bid by Contractor for resurfacing for Sheet Concrete or Bituminous Concrete. Work done outside of the four foot limit shall be paid for at the unit price bid for Special Adjustment of the required typo.

3.1.11.8 Penetration of Base (Covering Method): If defective or unpaved areas requiring concrete base renewal are encountered in the resurfacing area, they shall, when directed by the Engineer, be excavated to a depth of six inches below

the existing pavement level and the excavation filled with 1:2:4 high early concrete, unless otherwise specified. Pavement for concrete used for base renewal, including subgrading shall be made at the price bid per cubic yard in the proposal.

After the completion of all necessary adjustments to pa vi ng, manholes and other incidental work, the existing pavement in the resurfacing area shall be cleaned of all dirt, debris, loose or foreign material, an all soft or fatty bituminous patches shall be removed immediately prior to the laying of the binder course mixture.

3.1.11.9 Preparation of Base (Stripping Method): If areas of defective concrete are found in the existing base after stripping the old asphalt pavement, they shall, when directed by the Engineer, be excavated to a depth equal to that of the existing concrete base (but not less than six inches) and the excavation filled with 1:2:4 high early concrete (No. 2-B coarse aggregate) unless otherwise specified. Payment for concrete used for base renewal, including subgrading, will be made at the price bid per cubic yard in the proposal.

After the resetting of manholes and other incidental work, the existing concrete base shall be cleaned of all dirt, debris, loose or foreign material, immediately prior to the laying of the binder course mixture.

3.1.11.10 Use of Additional Binder Mixture: Additional binder course mixture, in excess of the amount or depth provided for in the specifications for the respective types of bituminous pavement, shall be placed when directed by the Engineer, under special conditions, as follows: (1) In local depressed areas in the old pavement. Binder mixture in such areas shall be spread and compacted as a separate operation prior to laying the continuous binder course; (2) When directed and in the amount directed by the Engineer, in order to restore satisfactory crown or longitudinal gradient for drainage purposes.

The maximum compacted depth of binder course to be spread and rolled in a single operation shall not exceed two inches.

3.1.11.11 Basis of Payment for Additional Binder: Payment f or additional binder shall be made at the price per ton bid in the proposal, on the basis of the amount of binder mixture furnished and placed in the resurfacing area in excess of the following normal requirements for the several classes of work”

<u>Cover Method</u>

Sheet Asphalt	100 lbs. per sq. yd.
Hot Mix or Cold Mix Bituminous Concrete	125 lbs. per sq. yd.
Special Asphalt Adjustments	150 lbs. per sq. yd.

<u>Stripping Method</u>

All Types 150 lbs, per sq. yd.

3.1.11.12 Plant, Materials, and Construction Methods: All of the requirements previously stated in these specifications for Sheet Asphalt and bituminous Concrete Pavements shall cover the work to be performed in Asphalt surfacing by the Cover and Stripping Methods, using the respective types and methods designated in the proposal.

3.1.12 PAVEMENTS

3.1.12.1 Granite Block Pavement

Description: This pavement shall consist of smooth dressed granite blocks, on a cement-sand or sand bed ¾ inch in thickness, with cement grout or bituminous mastic filler, as designated paved on the prepared base course.

With Portland cement grout joint filler, cement-sand bed shall be used; with bituminous mastic filler, sand bed shall be used.

Materials:

Sand for bed or cement-sand bed shall be Type A; for cement grout filler shall be Type B; for bituminous mastic filler shall be Type C-1 natural sand.

Portland cement for cement-sand bed or grout shall be type 1 or Type 2, unless Type 3 (high early) is specified.

Asphalt cement for mastic filler shall be 60-70 penetration conforming to the requirements of 3.1.3.

Granite blocks shall conform to the quality, size and dressing requirements of 3.1.3 and 3.1.3 for smooth dressed blocks.

Care in Handling Blocks: Care shall be exercised in handling the blocks so that the edges and corners shall not be chipped or broken, as blocks otherwise acceptable may be rejected on account of spalling.

Cement-sand or Sand Bed: The concrete base shall be cleaned of all loose and foreign material just before spreading the cement-sand or sand bed, having an average thickness of ¾ inch.

Cement-sand bed (for use only with cement grout joint filler) shall consist of one part of Portland cmenet to four parts by volume of Type A sand, thoroughly mixed dry in an approved mechanical batch mixer until a uniform color is obtained.

t Paving Smooth Dressed Blocks: The blocks shall be sorted and gauged, those of the same width and depth being placed in consecutive rows across the full width of the area being paved. Blocks differing in width more than ¼ inch will not be allowed in the same row. They shall be set vertically on edge in close contact with

each other, each block touching the adjoining block on sides and ends, in straight rows across the roadway, at right angles to the center line, except when otherwise directed at intersections. Blocks in adjoining rows shall be set to break joints by a space of not less than three inches, and when thoroughly rammed to the finished grade, the joints shall not exceed ½ inch in width. Blocks shall not be laid more them twenty-five feet in advance of ramming.

Ramming: On all granite block pavement construction the number of rammers to be operated shall be in proportion of one rammer to every five pavers. Each block shall be rammed to a solid even bearing and the ramming shall immediately follow the paving in the same order in which the blocks a re laid. Any block that remains above or is driven below the general surface of the finished pavement or is in any way defective shall be immediately removed and replaced.

After completing the ramming, the granite block surface shall be tested longitudinally with a ten-foot straight-edge and any depressions or projections greater than ¼ inch shall be corrected by repaving before the joint filling is started.

Grout Joint Filler: After the blocks have been brought to a uniform surface, and wetted by sprinkling with water, grout filler, composed of one part of Portland cement and two parts Type B sand mixed with clean, fresh water, shall be broomed into the joints , and the operation shall be continued as the grout settles, until the joints are thoroughly filled flush with the surface of the blocks, immediately after which the entire pavement shall be broomed to a smooth surface. A squeegee scraper shall be used on the last application of the grout.

An approved mechanical mixer shall be used, with a mixing time of not less than one minute. The consistency of the batches of grout shall be uniform, sufficiently fluid to run to the bottom of the joints but not so fluid as to cause immediate separation of the water from the cement and sand and, when the grout is transported from the mixer in buggies, it shall be thoroughly agitated just prior to its application to the blocks.

Within one-half to three-quarters of an hour after the last application has been made and the grout between the joints has fully subsided and the initial set is taking place, the whole surface shall be lightly sprinkled with water, and the surplus grout left on the top shall be swept into the joints so as to bring them up flush and full.

All paving shall be grouted the same day that the blocks are laid. No grouting shall be done when the air temperature is lower than 35 deg. F. nor during rain or snow.

Bituminous Mastic Filler: The join t filler shall consist of equal part s by volume of hot sand (Type C-1) and asphalt cement. The asphalt cement shall be heated in

kettles or tanks equipped with an approved thermometer and both the asphalt and sand shall be at a temperature between 300 and 375 deg. F. when used. The mastic of asphalt cement and sand will then be made by thoroughly mixing and stirring. The surface of the blocks shall be dry and shall be swept free of all dirt or foreign material and the mastic shall be poured and worked in to the joints with ho t iron squeegees, a s directed, until they are full, more pouring being done if necessary so that the joints will r ema in filled, flush with the surf ace of the pavement. The equipment for heating materials shall be such a s will permit pourers to follow closely the rammers, and all joints of rammed pavement shall be poured with the filler before the cessation of work for the day. No bituminous mastic filler shall be placed when the air temperature is below 35 deg. F. nor during rain or snow.

Rail Channel Filler: In streets traversed by railway tracks, rail channel filler shall be applied to conform with the requirements of 3.1.6.

Granite Block Runners: When smooth dressed granite blocks are t o be laid as runners adjacent to railway tracks, they shall be paved in a double row on a thin, damp, mortar bed or directly on the concrete base immediately after the surplus water has subsided and before the concrete has ta ken initial set. The top of the blocks shall be flush with the rail tread surface. Joints shall not exceed ½ inch in width and shall be backed by at least 3 inches. The blocks shall be backed with thoroughly rammed concrete and the joints immediately filled with Portland cement grout filler.

Those granite blocks will be paid for at the price bid for smooth dressed granite block paving.

Protection of Surface: For cement grout joint filler, after the grouting is done and a sufficient time f or initial set has elapsed, so that a coating of sand will not absorb any moisture from the grout, ½ inch of sand shall be spread over the whole surface. When the work is subjected to an air temperature of 75 deg. F., or more, the sand shall be sprinkled 3 times a day for 3 consecutive days. The highway shall be kept closed to traffic for at least 7 days. Should the bond between the blocks become broken before the work is accepted, such work shall be regrouted or relaid and protected for a t least 7 days until hardened. When a temperature of 35 deg. F. or lower is anticipated the pavement shall, when directed by the Engineer, be covered with salt ha y 6 inches deep.

For bituminous mastic filler, after the joints have been filled flush, the surface of the blocks shall be covered with a thin, uniform coating of sand. No traffic of any description shall be permitted on the pavement until the bituminous mastic has reached atmospheric temperature.

3.1.12.2 Redressed Granite Block Pavement

3.1.12.2.1 Description: This pavement shall consist of a redressed stone block surface on a cement-sand or sand bed three-quarters of an inch in thickness, with cement grout or bituminous mastic filler, as designated, constructed on the prepared base course. With Portland cement grout filler cement-sand bed shall be used; with bituminous mastic filler, sand bed shall be used.

3.1.12.2.2 Materials and Construction methods: The size and character of blocks shall meet the requirements of Paragraphs 3.1.3 and 3.1.3.

Any deficiency in blocks required to complete the work, will be supplied by the City, the Contractor to haul the blocks from designated points, when directed, and the cost of hauling to be paid at the price bid in the bid proposal.

Any surplus blocks will similarly be hauled by the Contractor to designated points.

Reheaded blocks shall be used for breaking joints, and shall be placed in alternate rows adjacent to rails, and adjacent to the curbs on streets not occupied by railway tracks.

The materials and methods of construction used shall conform to the provisions of Paragraphs 3.1.3 to 3.1.12 inclusive.

3.1.12.2.3 Disposal of Unsuitable Blocks: Existing blocks too small, misshapen or otherwise unfit to redress in to blocks in accordance with these specification shall, when directed by the Engineer, be hauled to the nearest City yard and neatly piled by the Contractor without additional compensation; otherwise to be disposed of by the Contractor.

3.1.12.3 Vitrified Brick Pavement

3.1.12.3.1 Description: This pavement shall consist of a surface of vertical fiber lug brick, 3 inches in depth, unless otherwise specified or indicated, with asphalt filled joints and a bituminous mastic bed, 3/4 inch in thickness, con structed on the prepared basecourse.

3.1.12.3.2 Materials:

Vertical fiber lug brick shall conform to the quality requirements of 3.1.3 to 3.1.3 and shall, in addition, be subject to visual inspection on the site of the work.

Asphalt filler shall be a blown asphalt cement with a melting point between 167 and 185 deg. F., complying with the requirements of 3.1.3 for brick filler.

Sand for bituminous mastic bed shall be Type A, which shall be dried prior to use.

Bituminous material for mastic bed shall be a cut-back asphalt cement meeting the requirements of 3.1.3 for rapid curing oil and containing an approved non-strip additive. The consistency of cut-back asphalt to be selected shall depend upon temperature conditions prevailing at the time the work is in progress as well as upon the character of the sand to be used.

3.1.12.3.3 Bituminous Mastic Bed: The mastic bed shall be spread on the prepared base course which has been cleaned of all loose and foreign materials.

3.1.12.3.4 Composition and Preparation: When the mastic bed material is mixed at the site of the work, the sand shall be dried prior to delivery to the site and thereafter shall be protected from moisture by tarpaulins or other approved means until the time of its use. Cut-back asphalt and sand shall be measured accurately and combined within the limits of 90 to 93% by volume of sand and 10 to 7% by volume of cut-back asphalt, u sing a pug mil l or other approved mixer. The resulting mixture shall be well-coated, slightly adhesive but workable, and the relative proportions of sand and bitumen shall be regulated for this purpose.

3.1.12.3.5 Spreading. The mastic bed shall be spread and shaped carefully so as to have a depth of ¾ inch, true to the required cross-section, after striking off by means of an approved templet. The mastic bed shall not be walked upon either before or after screeding with the templet and no more bed shall be prepared than can be used during any continuous working period. Surplus bed, or bed which is damaged or displaced prior to paving shall be removed and replaced.

3.1.12.3.6 Laying Brick: Upon the prepared mastic bed the brick shall be immediately laid with the best face up, with the lugs in the same direction and with the courses straight and at right angles to the center line of pavement, unless otherwise directed ta intersections. All joints must be broken by at least 3 inches and the courses straightened by tapping lightly with a sledge on a 4 x 4 inch timber, 3 feet in length, provided for that purpose. Only whole brick shall be used, except in starting or finishing courses or for necessary closures, as may be directed. The cutting and trimming of the brick shall be used and the cut ends laid toward the center of the pavement, except at structures. All brick shall be clean when laid and kept clean and entirely free from any foreign material until the pavement is completed. Pavers laying the brickshall stand on an area

previously paved. All joints shall be kept clean and open to the bottom until filled as specified.

3.1.12.3.7 Railway Track: Rail channel filler, when required, shall be placed as specified in 3.1.6.

Brick shall not be laid within ¼ inch of a rail and after rolling shall be approximately flush with the top of the rail unless otherwise directed.

3.1.12.3.8 Rolling. After paving the brick and sweeping chips and debris from the surface of the pavement the brick shall be subjected to visual inspection. Badly cracked, spalled, or misshapen brick shall be removed by the Contractor as directed. Those on which lugs are turned in the wrong direction or which are slightly cracked shall be turned over. Immediately adjacent to the curb, the brick shall be rammed with a hardwood rammer to the required grade.

The brick shall then be rolled with a power driven tandem roller, weighing not less than five nor more than ten tons. Rolling shall be done longitudinally on boards not less than 10 inches wide and 12 feet long, dressed to a uniform thickness of 13/16 inch, laid longitudinally and in close contact. Rolling shall begin at the curb and progress slowly toward the center of the street or to the nearest rail. Boards which are split or damaged shall be replaced. After completion of the rolling, the brick shall be re-inspected and broken brick shall be removed and satisfactorily replaced.

The progress of the work shall be such that at all times it shall be ready for pouring joint filler within fifty feet of the completed paving.

3.1.12.3.9 Asphalt Joint Filler. After applying a separating agent to the surface of the brick, asphalt filler shall be applied, the surplus removed and the finished pavement shall have all joints filled with asphalt flush with the top surface of the brick.

Asphalt filler, as previously specified, shall be heated in approved heating kettles, brought to and maintained at a temperature between 400 and 450 deg. F., with constant agitation to prevent damage. The kettles shall be equipped with thermometers to indicate the temperature of the asphalt at all times.

The separating agent, consisting of concentrated calcium chloride solution (containing 1% by weight of laundry starch) or other solution performing the same function which shall be approved by the Engineer, shall be applied to the surface of the brick by a spraying device which shall produce a fine mist, sufficient to wet the surface without running into the

joints. Curbs and structures in the paving area shall also be sprayed to prevent adhesion of the asphalt.

After spraying, the asphalt filler shall be poured or flushed into the joints directly from buckets, buggies or other similar containers using special squeegees or lutes to manipulate the asphalt over the brick surface and leave a slight excess. This shall be supplemented by hand pouring, when necessary, adjacent to curbs or structures, or in any particularly filled areas which may develop. After the filler has cooled sufficiently, the surplus shall be removed from the surface with the aid of a flat-bladed tool. The method of removal shall be such that there will be no tendency to pull or loosen the filler in the joints.

Surplus filler may be reused by returning to a heating kettle and mixing gradually with sufficient new material to avoid excessive foaming or overflow of the contents of the kettle.

Hand pouring shall be done where necessary on partially filled joints. Upon completion of the work, all curb and adjacent structures shall be free from bituminous filler and the surface of the brick shall be clean, with all joints filled flush with the top.

3.1.12.3.10 Opening to Traffic: The pavement shall be opened to traffic when the asphalt joint filler has cooled to air temperature, as directed by the Engineer.

3.1.12.4 Plain Cement Concrete Pavement.

3.1.12.4.1 Description: This pavement shall consist of a steel-free concrete slab, having the form and dimensions indicated on the plan or proposal, with expansion, contraction and construction joints as shown on the standard drawings of the Department of Streets or as herein specified, together with sub-slabs under joint expansion.

3.1.12.4.2 Materials and Concrete Mix: The Portland cement, fine and course aggregate shall be as follows:

Portland cement shall be Type 1 or Type 2 or, when specified or directed, Type 3 (high early). In all cases, the Portland cement shall be air-entraining, unless the air-entraining agent is added at the concrete mixer.

Fine aggregate shall be Type A concrete sand, conforming to the requirements of 3.1.3 and Gradation Table 1. Coarse aggregate shall be crushed stone, gravel or crushed gravel conforming to the quality requirements of 3.1.3 and size No. 3-B in Table 2.

Portland cement concrete shall be air-entrained and shall be a 1:2:3 mix conforming to the requirements of 3.1.3 to 3.1.3 inclusive, and Table 3.

The slump, as placed in the work, shall be not less than 2-1/2 nor more than 3-1/2 inches.

3.1.12.4.3 Joint Fillers: Preformed expansion joint filler shall be non-extruding and resilient, bituminous fibre type conforming to ASTM Specification: D-544. For use in transverse expansion joints, the filler shall be ¾ inch in thickness and adjacent to curbs or manhole castings ¼ inch in thickness.

For sealing joints, the material shall be a hot-poured asphalt cement containing mineral filler conforming to 3.1.3; or, when specified, hot-poured asphalt-rubber compound conforming to the requirements of ASTM D-1190 or Federal Specification SS-F-336-A.

The Contractor shall obtain approval of the preformed expansion joint and the sealing compound proposed for use, prior to beginning work and, when directed, shall submit suitable samples to the Department of Streets, City Hall Annex.

3.1.12.4.4 Curing Material: Concrete curing material shall be an approved clear liquid membrane-forming compound of non-bituminous nature, to be applied at the rate of one gallon to approximately 20 square yards. Sample of the curing compound shall be submitted to the Department of Streets, prior to starting work, when directed.

Materials for mat curing (in lieu of liquid curing compounds) shall consist either of burlap weighing not less than 7 ounces per square yard when clean and dry (used double thickness) or cotton mats consisting of one-ply sheets of cotton felt, suitably covered on both sides with burlap or coarse cotton fabrics.

3.1.12.4.5 Forms: All forms for concrete pavement shall be made of steel except for use on curves having a radius less than 150 feet or for closures less than 10 feet in length. Under the latter conditions, wood forms in satisfactory condition and of approved design may be used.

Steel forms shall have a depth equal to the specified edge thickness of the pavement, shall be made in sections not less than 10 feet in length (except when used on curves) and shall show no variation from a straight line at the top of the form greater than 1/8 inch in ten feet. Forms 8 inches or more in height shall be at least 8 inches wide at the base; for lesser depths, the base width shall be at least equal to the height. The flange bracing shall extend outward not less than 2/3 of the height of the form and there shall be three stake pockets per section of form, employing steel pins with dimensions of not less than 7/8 inch diameter and 30 inches in length.

3.1.12.4.6 Subgrading and Form Setting: The subgrade shall be thoroughly compacted and brought accurately to grade along the form lines prior to setting any forms. If any filling is required, the area to be filled and compacted prior to form setting shall extend not less than 15 inches outside of the base of the forms. Forms shall be cleaned thoroughly and oiled each time they are used, and shall be staked securely and accurately to the required line and grade.

Forms shall be set sufficiently ahead of the point where concrete is being placed to permit of proper inspection and correction if required, and shall not be removed within 24 hours after the concrete has been placed.

An approved subgrade tester, extending between form lines and having points set within one-eighth inch of the theoretical subgrade surface, shall be used in the final preparation of the subgrade and immediately prior to placing concrete. High or low areas shall be corrected and compacted.

Concrete shall be placed only on a moist subgrade and sprinkling, when required, shall supply as much water as can readily be absorbed by the subgrade.

When hauling of ready-mixed concrete or batched concrete aggregates is permitted on the prepared subgrade, the Contractor shall maintain and operate a tandem power roller weighing not less than five tons for the restoration of the subgrade throughout the progress of the work.

Concrete shall be placed only on a moist subgrade and sprinkling, when required, shall supply as much water as can be readily absorbed by the subgrade.

When hauling of ready-mixed concrete or batched concrete aggregates is permitted on the prepared subgrade, the Contractor shall maintain and operate a tandem power roller weighing not less than five tons for the restoration of the subgrade throughout the process of the work.

3.1.12.4.7 Mixing Concrete: Concrete shall either be ready-mixed or job-mixed, conforming to the requirements of 3.1.3 and 3.1.3. The concrete shall have a slump between 2-1/2 and 3-1/2 inches, as delivered or as deposited from the mixer.

3.1.12.4.8 Concrete Sub-Slab: At the location of each expansion joint, a concrete sub-slab (1:2:3 mix) 9 inches in depth, 24 inches in width with its center line under the joint, and a length equal to the width of the lane as shown on Standard Drawings L-744 and L-748 of the Department of Streets, shall be constructed at least 24 hours prior to pouring the concrete slab at the joint, and covered with 2-ply waterproof insulating paper.

3.1.12.4.9 Placing Concrete: Concrete may be placed either by hand or machine methods, and shall be deposited on the subgrade only at the rate at which it can be spread and finished. In either case, the methods employed shall result in concrete which is free from pockets of segregated coarse aggegate or mortar; the concrete shall be thoroughly compacted, without irregularities either above or below the true surface, and without a distinct layer of mortar or laitance on the finished surface.

Concrete shall be struck off and compacted with an approved templet, shaped to the exact cross-section permits and the templet shall have sufficient weight and rigidity to avoid either sag or deflection while it is I nuse. When a hand-operated strike-off templet is employed, it shall have mounted upon it a motion-driven vibrator which will produce the required compaction of the concrete at the specified slump. The strike-off templet shall pass over the surface of the freshly placed concrete one or more times, as required to remove surplus concrete and eliminate either ridges or depressions.

3.1.12.4.10 Joints: Joints in the concrete pavement shall be transverse expansion or construction joints, transverse dummy contraction joints, and longitudinal construction or expansion joints. When placing concrete is discontinued for any reason within 10 feet of any transverse joint. Joints shall be constructed as follows:

Transverse Expansion Joints. These joints shall be constructed at the ends of radius curb returns at street intersections and at intermediate points approximately 200 feet apart, unless otherwise specified or shown on the plans. In widening construction, they shall be formed opposite existing joints. Transverse expansion joints shall be formed with the use of preformed expansion strip and a metal bulkhead at least 1/8 inch thick shaped to the exact cross-section of the pavement and having a cap or joint shield to enclose the top of the expansion strip. The bulkhead shall be staked securely in place, at right angles to the center line of the lane and exactly perpendicular to the surface of the finished concrete. The expansion joint material shall be held snugly against the surface of the bulkhead throughout.

Transverse expansion joint filler shall be cut to the shape of the concrete cross-section, shall be placed in continuous strips from edge to edge of lane with pieces of less than lane width clipped together, and shall extend from the bottom of the slab to an elevation slightly below the surface of the finished concrete. No fin or wedge of concrete shall be permitted to extend the ends or under the bottom of the expansion strip.

Concrete shall be deposited against both sides of the bulkhead, with shovels, for the full width, using only workable, non-segregated concrete for this purpose. The concrete shall then be spaded and compacted thoroughly.

Bulkheads at expansion joints shall be removed slowly and carefully after the concrete has been placed and struck off on both sides of the joint and any space resulting from the removal of the bulkhead shall be eliminated by carefully working in fresh, well-proportioned concrete. Surplus mortar shall be removed at and around the top of the expansion strip and after surface-finishing operations have been completed, and when the concrete has reached the required consistency, both sides of the joint shall be finished with an approved edging tool.

Necessary finishing of all transverse joints shall be performed from approved bridges which shall span the concrete.

Transverse Construction Joints. These joints shall be constructed at right angles to the center line of lane and exactly perpendicular to the finished concrete surface. They shall be formed at the middle and at the end of the day's work and otherwise at any time when the concrete would acquire an initial set as a result of an interruption in the pour. The bulkhead for this purpose shall have attached to it an approved horizontal key-way. The placing and finishing of concrete adjacent to these joints shall in other respects be the same as for transverse expansion joints.

Transverse Contraction Joints. These joints shall be formed in the finished concrete either by the use of a concrete saw so as to produce a straight line cut having a depth not less than 2-1/2 inches perpendicular to the surface of the pavement and to the center line of the street; or the joint may be formed by installing in the fresh concrete a thoroughly cleaned and properly oiled metal strip, angle shaped, having a down-standing leg equal to at least one third (1/3) of the thickness of the concrete pavement, the metal trip to remain in place until the concrete has hardened sufficiently to permit of rounding the edges of the groove with an approved edging tool.

When a saw is used, the time at which the cut is made shall result in a sharp-edged groove, free from crumbling or spalling.

The intervals between transverse contraction joints shall be shown on Standard Drawing No. L-743 of the Department of Streets.

Longitudinal Construction Joints. These joints shall be longitudinal key joints formed between lanes in the pavement construction and elsewhere at street intersections, as required by the standard drawings of the Department of Streets. Placing of concrete against forms, finishing and

edging shall be specified for transverse expansion joints. Honeycombed areas found after the removal of forms shall be corrected immediately.

Key joints shall also be formed in the exposed edges of slabs at street intersections which are unpaved at the time that this work is in progress.

Longitudinal Expansion Joints. A preformed expansion strip 1/4” in thickness, shall be placed against straight and radius curbing throughout the work. The width shall equal the edge depth of the pavement.

Joints at Manholes. At manhole castings and other similar structures extending through the concrete pavement, excepting inlets, a preformed non-extruding expansion strip ¼ inch in thickness and width equal to the depth of the concrete slab shall be wrapped around and held snugly against the casting by wiring. Standard dummy contraction joints shall also be cut around and in the vicinity of the manhole structures as shown in further detail in Drawing No. L-669 of the Department of Streets.

3.1.12.4.11 Finishing: After the concrete has been struck off, minor irregularities and small areas showing surface voids shall be corrected by the use of a long-handled wood float, with small quantities of fresh concrete supplied during this operation, if required, but without producing a layer of thin or soupy material upon the surface.

After floating, the surface shall be scraped or luted from the center toward the sides with a long-handled straight-edge in order to remove excess water and surface mortar and for the further correction of minor irregularities. The entire surface shall then be straight-edged, before initial hardening has occurred, using a straight-edge about 10 feet long, mounted on a long handle and laid lightly on the surface of the concrete, parallel to the center line of the lane and at intervals of 3 to 4 feet across the road, with successive paths of the straight-edge overlapping. Any surface irregularities found as a result of the straight-edging shall be corrected immediately.

After the final checking of the surface condition, and after water sheen has disappeared from the concrete, a belt of rubber, fabric, or thin board about 10 inches wide and two feet longer than the width of the slab shall be drawn along the concrete with a sawing motion in order to produce a granular surface texture and the final surface finish shall then be produced by dragging a strip of wet burlap longitudinally along the full width of the finished concrete.

3.1.12.4.12 Curing: Curing operations shall begin as soon as the concrete has reached a consistency where the surface will not be marred by the application of the curing compound or the placing of burlap strips or mats.

Liquid curing compounds shall be applied in the form of a fine spray, at a rate not less than 1/20 gallon per square yard and shall, in every case, produce an unbroken film over the entire surface of the concrete.

When burlap is used for curing, the strips shall be placed double thickness, with each strip overlapping one-half of its width. Burlap or cotton mats shall be wet before initial placing and shall be kept saturated with water for at least 72 hours after placing.

3.1.12.4.13 Cold Weather Concreting: Extreme care shall be exercised in the placing, curing and protection of concrete pavement during late season or cold weather conditions.

Concrete shall not be placed upon a frozen subgrade, nor shall it be poured when the temperature in the shade is below 35 deg. F. When the air temperature is between 35 and 40 deg. F., or when temperatures below 40 deg. F. may be anticipated after the cessation of the work, or during the night, the concrete as placed in the work shall be at a temperature between 60 and 90 deg. F. and shall also contain calcium chloride (used in solution) in the amount of 2 pounds per bag of cement or 12.5 pounds per cubic yard of paving concrete.

When directed by the Engineer, the Contractor shall place salt hay over the concrete to a uniform depth of not less than six inches for protection against anticipated temperatures of 35 deg. F. or less. Payment for furnishing and placing salt hay will be at the contingent price per square yard.

3.1.12.4.14 Deficiency in Thickness: For the verification of the average thickness and total quantity of concrete placed, the Contractor shall provide the Engineer with a carbon copy of each original delivery ticket accompanying loads of central-mixed concrete for each day’s pour; or equivalent information covering size and number of batches of job-mixed concrete, for comparison in each case with the computed requirements.

In the event that a deficiency in quantity or thickness of concrete is found to exist, then then procedure specified in 3.1.6, Concrete Base Course, shall apply and adjustments in price computed on a square yard basis or replacements of pavement shall be made.

3.1.12.4.15 Sealing of Joints and Cracks: Prior to opening any section of pavement to traffic all joints and cracks shall be cleaned thoroughly, dried if necessary to eliminate moisture, then filled or sealed with bituminous joint sealer complying with the requirements of 3.1.3.

3.1.12.4.16 Protection of Completed Concrete: The Contractor shall exclude traffic from the completed concrete pavement by placing suitable

barricades and red lanterns or torches and by maintaining a watchman during the periods when no work is in progress. The pavement shall not be opened to traffic until the last laid concrete is at least seven days old; except that high-early strength concrete may, under favorable temperature conditions, be opened to traffic three days after placing.

3.1.12.5 REINFORCED CONCRETE PAVEMENT

3.1.12.5.1 Description: This pavement shall consist of a reinforced concrete slab (part width construction) having the dimensions shown on the plan or indicated in the proposal, including load transfer units installed at all transverse joints. Sub-slabs at transverse joints are not required.

3.1.12.5.2 Materials: Fine and coarse aggregates and composition of concrete mixture shall be as specified in 3.1.12, for Plain Concrete Roadway Pavement, using 1:2:3 air-entrained concrete. Preformed expansion filler shall be non-extruding bituminous fiber (ASTM Specification D-544) and poured joint filler shall be asphalt cement containing mineral filler, meeting requirements of H-37 (a) unless otherwise specified. Curing material shall conform to the requirements of 3.1.12 for nonbituminous membrane forming compound.

3.1.12.5.3 Steel Reinforcement: This reinforcement shall consist of sheets of steel wire fabric rigidly welded at all joints and points of intersection, or of bar mats as specified in 3.1.3. The reinforcement shall have the weight and size and spacing of wires or rods indicated in the proposal shown on the standard drawings of the Department of Streets.

Wire fabric or bar mat reinforcement shall be furnished in flat sheets 16 feet long. Bar mats may have an approved hinged joint in each sheet.

3.1.12.5.4 Load Transfer Assemblies: These assemblies, for use at all transverse expansion and construction or contraction joints, shall be so designed as to support the load transfer units (dowel bars) in the required position, both horizontally and vertically, so securely that they will not be disturbed during the placing of the concrete adjacent to both sides of the joint; as well as to define the position of the transverse joint and provide support for the preformed expansion joint material. Dowel bars for use at transverse joints shall be smooth, round steel bars conforming to the requirements of 3.1.3. They shall be 1 inch in diameter, by 18 inches long, spaced 12 inches on centers unless otherwise indicated on the plan or in the proposal. They shall not be burred or deformed and shall be provided with close fitting steel caps or sleeves for use at expansion joints only. Dowel bar baps shall be provided with a suitable ridge or flange to hold the end of the bar at least one inch from the closed end of the cap and thus create the required expansion space.

Metal plates for use at transverse contraction joints shall be not lighter than 14 gauge material, shall have the required depth and be cut to conform to the cross section of the pavement except that they may be beveled slightly at the ends, and shall be punched properly to maintain position of the dowel bars.

Steel joint shield, for use at transverse expansion joints, shall not be lighter than 12 gauge thickness, shall conform to the crown of the pavement and shall fit snugly over the premolded expansion joint material. The joint shield shall be of sufficient depth to prevent bending or displacement of the joint material from its proper position.

Stakes, pins and other accessories shall be approved as to shape, length and sufficient rigidity for the intended use.

3.1.12.5.5 Forms Subgrading and Placing Concrete: The methods employed shall conform to the requirements of 3.1.12, except that the concrete shall be deposited in two layers, the first of which shall be struck off approximately 2 inches below and parallel to the finished surface, after which the reinforcement shall be placed in the required manner.

3.1.12.5.6 Placing Reinforcement: At the time of placing, all reinforcement shall be free from excess rust, scale or coating of any character which would tend to prevent its bond with concrete. The general position of the reinforcement sheets, the lapping of sheets and clearance from transverse joints and edges of slabs shall be as shown on the plans or standard drawings.

3.1.12.5.7 Joints: Longitudinal joints shall be constructed as required by the plans and standard drawings, and in the manner specified in 3.1.12, Plain Cement Concrete Pavement. All longitudinal joints shall be of the keyed type.

Transverse construction or contraction joints in reinforced concrete pavement shall be provided wherever it is necessary to stop concrete operations and at intermediate points as shown on the plans or indicated in the proposal. Load transfer assemblies shall conform to the requirements of H-168, excluding the use of expansion joint material, but including the use of permanent steel separating plate and an approved cap or shield, when required, and the remaining half shall be coated with graphite lubricant in order to provide slippage.

Transverse expansion joints shall be constructed only opposite curb returns of intersecting streets in built-up area, or, under other conditions, at locations indicated on the plan. Load transfer assemblies shall conform to

the requirements of 3.1.12 and the free ends of dowel bars shall be coated with an approved graphite lubricant prior to encasing in metal caps.

All special assemblies for use at transverse joints shall be approved by the Department of Streets, prior to use, on the basis of suitable drawings submitted for that purpose, or on the basis of actual demonstration of their use.

At all transverse joints, the utmost care shall be exercised to set the joint assembly exactly at right angles to the center line and the surface of the pavement at that location, to stake it so securely that the position of the joint assembly will not be altered during the placing of the concrete. Concrete shall be placed carefully and compacted thoroughly at these joints and the methods employed shall be such as to avoid disturbance of the alignment of the dowel bars or any portion of the joint assembly.

Transverse dummy contraction joints shall be used in reinforced concrete pavement only if specifically indicated on the plan or in the proposal.

3.1.12.5.8 Finishing and Curing: Finishing and curing for reinforced concrete pavement shall conform to the requirements of 3.1.12, 3.1.12 and 3.1.12.

3.1.12.5.9 Cold Weather Concrete, Sealing Joints and Protection: Precautions to be taken when concrete is placed during cold weather, the sealing of joints and crack and provision for the protection of completed concrete shall conform to the requirements of 3.1.12, 3.1.12 and 3.1.12 respectively.

3.1.12.5.10 Deficiency in Thickness: For the verification of the average thickness and total quantity of concrete placed and the procedure in the event that a deficiency in the thickness or quantity of concrete is found to exist, the provisions of 3.1.6, Concrete Base Course, shall apply and adjustments in price or replacement of pavement shall be made in accordance therewith.

3.2 Concrete Alley Driveways

3.2.1 Description: This pavement shall consist of a steel-free concrete slab, generally dished in shape, having the width or widths shown on the plan and other dimensions as indicated on Standard Drawing L-4 of the Department of Streets, constructed on the prepared subgrade.

3.2.2 Subgrading: Subgrading for the original construction or the repaving of an existing alley driveway shall conform to the requirements of 3.1.1. In the construction of an original driveway pavement, excess excavation will be paid for at the unit price bid for that item.

3.2.3 Materials and Concrete Mixture: Portland cement, fine and coarse aggregates shall comply with the requirements of 3.1.3 to 3.1.3, inclusive. Fine aggregate shall be Grade A and coarse aggregate shall be crushed stone, gravel or crushed gravel, size No. 3-B.

Portland cement concrete shall be air-entrained, 1:2:4 mixture and the composition, proportioning and mixing shall comply with the requirements of 3.1.3 to 3.1.3, inclusive, and Table 3. The slump, as delivered to the site or deposited from the mixer shall be 2-1/2 to 4 inches.

Premolded expansion joint filler shall be nonextruding fiber and joint sealer shall be asphalt cement containing mineral filler, conforming respectively to the requirements of 3.1.3 and 3.1.3. Transverse expansion joint shall be ¾ inch in thickness cut to the cross-section of the finished pavement and longitudinal expansion joint shall be ¼ inch thick, with a width equal to the depth of the concrete slab at the line of installation.

Curing material shall comply with the requirements of 3.1.12

3.2.4 Forms, Subgrading and Placing Concrete: The equipment and methods employed in placing the concrete shall conform to the requirements of 3.1.12, 3.1.12, and 3.1.12, except where obstructions or other special conditions require modifications which shall be approved by the Engineer.

3.2.5 Joints: Joints shall include transverse expansion and construction joints, dummy groove contraction joints and longitudinal expansion and construction joints, conforming to the requirements of 3.1.12.

Transverse expansion joints shall be formed at points of change in grade, at points of curvature in horizontal alignment and otherwise at intervals of approximately 200 feet. Dummy groove contraction joints shall be formed at intervals as shown on Standard Drawing L-4. Longitudinal expansion joints shall be formed along the face of concrete copings and retaining walls and where the new pavement abuts an existing concrete pavement.

A longitudinal key joint shall be formed on the outside edge of each slab.

3.2.6 Finishing: Finishing methods shall conform to the requirements of 3.1.12, except that where the clearance between fences, walls or other structures prohibits the use of any of the equipment or methods therein specified, modifications in the finishing procedure may be approved by the Engineer. In such event, however, the complete concrete shall be thoroughly compacted and the surface shall be dense and free from voids or inequalities of any kind.

3.2.7 Curing: Curing of the concrete shall be accomplished with an approved clear liquid membrane-forming compound of non-bituminous nature, as specified in 3.1.12, and the method employed shall comply with the requirements of 3.1.12.

3.2.8 Cold Weather Concrete, Sealing Joints and Protection: Precautions to be taken when concrete is placed during cold weather, the sealing of joints and cracks and

provisions for the protection of completed driveway pavement shall conform to the requirements of 3.1.12, 3.1.12 and 3.1.12 respectively.

3.2.9 Deficiency in Thickness: For the verification of the average thickness and total quantity of concrete placed and the procedure in the event that a deficiency in the thickness or quantity of concrete is found to exist, the provisions of 3.1.6, Concrete Base Course, shall apply and adjustments in price or replacement of pavement shall be made in accordance therewith.

3.2.10 Contingent Work: Other work required in connection with the construction of concrete driveway pavement, including construction of masonry retaining walls, drainage structures, concrete curb, steps and coping, repairs to and replacement of fences shall be performed under this contract in compliance with the provisions of these specifications or other appropriate specifications of the City of Philadelphia, pertaining thereto. Concrete driveways across footways shall be heavily service type 8" thickness.

The repaving of portions of driveways or alleys not actually included in a partial repaving plan shall be done only upon personal approval and direction by the Engineer.

3.2.12 Concrete Coping: Where an irregular masonry wall or similar structure is exposed by the excavation for the proposed driveway pavement, a concrete coping shall be constructed along the wall sufficiently in advance the driveway construction to provide a means for striking off the new pavement.

This coping shall be 6 inches in width at the top, 7 inches at the bottom (with a face batter of 1 inch) and 8 inches in depth. The concrete proportions shall be 1:2:4, air-entrained, using either no. 2-B or 3-B coarse aggregate. Longitudinal expansion joint shall be placed between the coping and the new pavement.

Concrete coping required in other locations shall be 1:2:4 air-entrained concrete and shall have the dimensions indicated or directed.

3.2.13 Concrete Curb and Steps: New concrete curbing, as indicated in the proposal and shown on the plans, shall be construed in accordance with standard specifications of the Department of Streets. The unit price bid shall include the removal and disposal of existing old curbing where required and closures shall be such as to avoid the use of pieces less than four feet in length.

Concrete steps shall be construed at the price bid per lineal foot where shown on the plans and shall include the removal and disposal of existing steps where required. Concrete shall be 1:2:4 air-entrained.

3.2.14 Drainage Structures: Inlets, vitrified pipe connections and drains shall be constructed in accordance with the current standard specifications of the Department of Water.

All drains within the new paving area shall be tested by flushing, by the Contractor, before work is started, to determine whether they function properly.

Where existing inlets are to be abandoned, the pipe shall be sealed and the materials removed and disposed of by the Contractor as directed.

3.2.15 Existing Fences, Trees and Hedges: Existing fences shall be adjusted where necessary, or as shown on the plans, and encroaching fences or walls shall be removed and placed upon abutting properties, respectively, by the Contractor without additional compensation.

When shown upon the plan, existing trees which encroach upon the proposed new driveway area shall be removed by the Contractor, including necessary grubbing, without additional compensation. Hedges moved or disturbed by the Contractor's work shall be reset by him in their proper position.

3.2.16 Iron Fences: New fences and appurtenances shall be of the type designated in the proposal. Pipe railing and chainlink fence shall comply with the detailed requirements of Standard Drawings L-582 and L-768, respectively, of the Department of Streets.

When painting is required for new iron fences a prime coat of red lead and chromate paint conforming to Federal Specification TT-P86-a (Type 2) shall be used and two field coats of standard approved metal protective black paint shall be applied.

Existing iron fence re-erected shall be thoroughly cleaned of dirt, scale, rust or other adhering substances. Bare spots shall be touched up with a primer, followed by two field coats of metal protective black, both conforming with specifications for paint for new iron fence.

3.2.17 Base Boards: Base boards for wooden frames, to be furnished and placed where directed, shall consist of 2" x 12" yellow pine plank, which shall be straight sound lumber of merchantable grade.

3.2.18 Exposed Masonry Wall: Where the surface of an existing stone wall, exposed by the excavation for the construction of the new driveway, requires pointing or plastering above the new driveway elevation, the exposed surface shall be cleaned thoroughly and wetted prior to the application of one part Portland cement to three parts of Type A o Type B sand, made into a stiff but plastic mortar. This work shall be paid for at the unit price bid per square foot.

Any additional rubble masonry required to present an unbroken face to an existing stone wall shall be constructed by the Contractor as directed and compensation shall be at the unit price bid for rubble masonry in the proposal.

3.2.19 Utility Structures: Utility companies are to be notified prior to the beginning of work where note on plan so indicates.

Philadelphia Electric and Bell Telephone poles are to be removed and relocated by the respective companies. Lamp posts will be removed and disposed of by the authority of the Department of Streets. Gas drips shall be adjusted to the required new grade by the Contractor without additional compensation.

3.2.20 Clothes Pole Castings: Clothes pole hole castings shall be reset or relocated by the Contractor without additional compensation. New castings, where required, must be supplied by the owners.

3.2.21 Damage to Existing Construction: when, during the course of the Contractor's work, damage is done to adjacent individual driveway ramps, existing coping along the edges of driveways or to abutting driveway or alley paving, the damaged portions shall be replaced or repaired by the Contractor in a substantial manner at his expense.

3.2.22 Maintenance Guarantee: The Contractor will be required to maintain all work done under these specifications in good condition for a period of one year from the date of completion and acceptance. By the City.

3.3 TRAFFIC ISLANDS

3.3.1 Description: Traffic and safety islands for the channelization of vehicular traffic and the safety of pedestrians shall be constructed at the locations and to the outlines and dimensions shown on the plans and indicated in the proposal, in accordance with these specifications.

Traffic islands shall be either: (a) Curb-enclosed areas with standard concrete curbing enclosing an area which may be paved or unpaved, as specified; (b) Monolithic concrete construction, with curbing omitted and the concrete island poured as a monolith on an existing concrete base; or, (c) Standard safety loading islands for street railways.

3.3.2 Scope of work: This work shall include the excavation and disposal of existing paving or other material required for the construction of the island, including the use of a pneumatic drill to cut through asphalt and concrete base in order to define the limits of the work; back-fil if required; preparation of subgrade and the construction of the concrete island, with appurtenances, complete in place, at the lump sum price bid. Such other work as may be indicated on the plan and in the proposal, shall be performed and paid for at the respective unit bid prices. The site of the work shall be cleaned up to the satisfaction of the Engineer.

3.3.3 Materials: All concrete for use in traffic and safety islands shall be 1:2:4 air-entrained, using No. 2-B coarse aggregate, except that in monolithic construction No. 3-B aggregate may be used.

Preformed expansion joint filler and bituminous joint sealer shall conform to the respective requirements of 3.1.3 (non-extruding bituminous fiber) and 3.1.3, respectively.

3.3.4 Curb-Enclosed Islands: These islands shall be constructed in compliance with the detailed requirements of Standard Drawing No. L-781 of the Department of Streets, both for paved and unpaved islands.

Concrete curbing, 8" x 18" in depth and concrete footway, 4 inches in thickness, on a variable depth cinder sub-base, shall be constructed in accordance with standard requirements of the Department of Streets for Concrete Curb and Footway. Exposed curb

height shall be 6 inches, unless otherwise indicated. Expansion and construction joints in curbing and expansion and contraction joints in footway paving shall be formed in accordance with standard Curb and Footway requirements, unless other wise directed by the Engineer.

3.3.5 Monolithic Concrete Islands: The existing concrete base upon which the island is to be constructed shall be cleaned thoroughly so as to be free from all loose or foreign material. The type of forms and method of setting shall be approved by the Engineer. Exposed vertical face of island shall be 6 inches, unless otherwise indicated on the plan or in the proposal. The existing base shall receive an application of neat cement grout immediately prior to the pouring of the concrete, which shall be placed as a monolithic slab, properly compacted and accurately struck off. The final finish shall be by hand floating with a wood float.

Transverse contraction joints of the dummy groove type shall be formed at intervals of approximately 20 feet, unless otherwise directed, in compliance with the methods specified in 3.1.12. When a traffic island is constructed upon an existing concrete roadway pavement, expansion joints shall be formed, in accordance with the methods of 3.1.12, to coincide with the position of joints in the existing pavement.

3.3.6 Safety Loading Island: These islands shall be constructed in compliance with these specifications and with the detailed requirements of the Standard Drawing of the Traffic Section of the Department of Streets for “Standard Safety Loading Islands” 1-car and 2-car lengths with variable width.

3.3.7 Curing, Protection and Pouring Joints: Concrete islands of all types shall be cured and protected from cold weather in accordance with standard requirements of the Department of Streets for Curb and Footway construction, except that a clear or pigmented membrane forming curing compound (non-bituminous type) may be applied for curing purposes in lieu of other specified curing materials.

After completion of all concrete work, or when directed by the Engineer, contraction and expansion joints and cracks shall be cleaned and thoroughly and, when dry shall be poured with bituminous joint sealer conforming to requirements of 3.1.3.

3.3.8 Painting Concrete: The exposed vertical face and top of curbing of all islands shall be painted with Standard White Stucco and Concrete Paint in accordance with the standards of the Traffic Engineering Section of the Department of Streets. Sample of the paint shall be submitted to the Department, as directed, before starting work.

3.3.9 Miscellaneous Provisions: The Contractor shall notify the Traffic Section at least 3 days in advance of starting work on the project.

The Traffic Section will remove, furnish, erect or relocate all traffic signals and signs, paint cross walk lines where required and advise the Contractor of the location of sleeves to be furnished and set by him for the reception of traffic signs.

Public utility poles, manholes, etc., will be removed or relocated by the respective owner.

3.3.10 Conduit: Conduits for wiring signals shall be two inch diameter, galvanized, copper-bearing steel pipe, having threaded and capped ends, and shall be of approved quality.

The conduit shall be placed in a trench at least 30 inches below the street surface and it shall terminate inside of and below the bottom of curb, as directed by the Engineer. Backfill shall be compacted to a degree equal to that of adjacent subgrade.

3.3.11 Repaving over conduit: The Contractor will be paid for restoring the concrete base and pavement surface over conduit trenches at the respective unit prices bid for these items.

When redressed granite blocks are required for repaving over a conduit trench, the redressed blocks will be supplied to the Contractor by the City, at the nearest City yard. The unit price bid for repaving shall include the cost to the Contractor of loading and hauling these block to the site of the work.

3.4 CURB, FOOTWAYS AND DRIVEWAYS

3.4.1 Generally

3.1.4.1 Lines, Grades, Measurements, Bills, etc. For all curb footway and driveway work the Contractor shall, at his own expense, obtain from the District surveyor all necessary lines and grades. For assessment work he shall obtain from the District Surveyor the necessary measurements, bills and certificates for the area paved, repaved or repaired, curb finished, reset or repaired, charges for which will be made in accordance with existing ordinances and assessed against the property owner. All final measurements of brick footway repairs shall be made before the pavement is covered with sand.

3.1.4.2 Assessment Work Payment: The Contractor shall accept assessment bills furnished by the City against the owners of any property fronting the work which has been done under these specifications. The City is by law entitled to charge against such properties, and such assessment bills shall be accepted in lieu of each, without recourse to the City in any event.

3.1.4.3 Collection of Assessment Bills: The Contractor shall at his own expense serve on the property owners or agents the duplicates of assessment bills which may be issued, and if payment is made, deliver to them the original bill duly receipted. If property owners fail to make a payment within 30 days a lien therefor may be filed against the property and the registered owner or owners thereof in the name of the City, to the use and at the expense of the Contractor.

3.1.4.4 Maintenance Guarantee: The Contractor will be required to maintain all work done by him under these specifications and contract in good condition for one year from the date of completion and acceptance by the City.

3.1.4.5 Use of Plant Mixed Concrete: All plant mixed concrete for curb, footway and driveway work shall be accompanied by a delivery slip shall indicate the character of the work for which the concrete has been ordered, the mix, and bear the stamp and signature of the inspector of the Department of Streets stationed at the central mixing plant.

3.1.4.6 Standard Drawings and Regulations: The latest approved standard drawings and regulations of the Department of Streets pertaining to curb, footways and driveways are herewith made a part of these specifications.

3.4.2 Curbing

3.4.2.1 Scope of Work: All curbing shall be constructed, set or reset to lines and grades given by the District Surveyor.

The price bid per linear foot shall include all excavation, labor, materials and equipment necessary for the work, including backfilling and cleaning up to the satisfaction of the Engineer. Unless otherwise indicated in the proposal form, the price bid for furnishing and placing new curb shall include the removal and disposal of existing curb replaced by the new curb. The price bid for furnishing and placing new curb shall further include the adjustment of a piece of existing stone curb immediately adjoining the ends of the new curbing as required to prevent an offset in the curb line.

At highway intersections, circular curbing shall be constructed of such radius as may be directed by the District Surveyor or shown on the plans. Necessary junctions shall be made with inlets without additional compensation. Sections of stone curbing set adjacent to inlets shall have square ends for the full depth of the stone and, where required, inlet covers shall be cut into the curbing flush with the top. Inlet walls that are disturbed by the curb construction shall be restored in a workmanlike manner, using 1:2 Portland cement mortar and any inlet stones broken by the Contractor shall be replaced by him.

3.4.2.2 Restoration of Footway Pavement: The unit price bid for furnishing and placing or resetting curbing shall include the restoration or adjustment in a substantial manner of existing brick footway pavement for a distance by 18 inches back of the curb, the resetting of the first row of flagstones, and replacing in a workmanlike manner the existing concrete footway pavement for an average width of 12 inches. Additional concrete pavement shall be replaced at the unit price bid in the proposal or indicated in the Schedule of Contingent Prices.

The foundation of the footway pavement back of the curbing shall be renewed where required and thoroughly compacted by ramming before the brick, flagstone or concrete is adjusted or replaced. All roadway pavement that may be distributed or displaced by the setting or resetting of curbing shall be restored without additional compensation.

3.4.2.3 Curved Curbing on Narrow Streets: When existing curved curbing is to be replaced at the intersection of narrow streets with streets of normal width, the radius of the new curbing shall be increased and an adjustment made as follows:

For cartways of 9 feet or less in width, the radius of the new curved curbs shall be increased to 14 feet and a connecting throat adjustment made to the confirmed curb of the narrow street;

For cartways of 9 feet to 20 feet wide, inclusive, the radius of new curbs shall be increased to 14 feet.

If, however, the angle of intersection of the two streets is other than 90 degrees, variation from the previously specified length of radius may be made, as directed or shown on the plan.

3.4.3 Concrete Curbing

3.4.3.1 Description: Concrete curbing shall be furnished and placed where shown on the plans or where directed by the Engineer, shall be 8 inches in width and 18 inches in depth, unless otherwise specified and shall be constructed on the prepared subgrade or foundation to the lines and grades given by the District Surveyor.

3.4.3.2 Materials: Concrete for use in the construction of curbing shall be 1:2:4 air-entrained using No. 2-B coarse aggregate and the concrete shall conform to the requirements of Paragraphs 3.1.3 to 3.1.3 and Table 3 of Standard Specifications for Paving and Repaving. Concrete foundation for curbing, to be used only where specified or directed, shall consist of 1:2-1/2:5 mix, using No. 3-B coarse aggregate.

Expansion joint material shall be premoulded asphalt expansion joint or non-extruding bituminous fiber type expansion joint filler, ¼ inch in thickness, with a width and depth equal to that of the new curbing.

3.4.3.3 Subgrading: The Contractor shall excavate to a depth of 18 inches below the top of the finished curbing, without disturbing the existing material below that depth. Under any circumstances the subgrade for the new curbing shall be thoroughly compacted, using hand-ramming where required.

3.4.3.4 Concrete Foundation: Where unstable subgrade conditions exist, a concrete foundation 6 inches in depth and 18 inches in width shall be constructed where directed by the Engineer, either as a continuous footing or under the joints of the new curbing. After this concrete has acquired satisfactory strength, the curbing shall be constructed to the proper lines and grades on the prepared foundation. The concrete placed as a foundation shall be paid for at the unit price bid in the proposal or indicated in the Schedule of Contingent Prices.

3.4.3.5 Forms: Forms shall be of steel of approved design, except that approved wood forms may be used on sharp curves or for closures. Forms shall be straight, free from warp and of sufficient strength to resist springing when staked in place. They shall be cleaned and oiled prior to each use, without causing a discoloration of the finished surface of the concrete.

3.4.3.6 Construction Methods: Forms shall be staked securely to the established lines and grades and any displacement which occurs before or during the operation of placing concrete shall be remedied by the Contractor.

The curbing shall be constructed in uniform lengths or blocks of 10 feet, except where closures necessitate a reduction in length, and the blocks shall be separated during construction by sheet steel templates 1/8 inch in thickness cut to conform with the size of the curbing. These templates shall be set and maintained accurately in a position at right angles to the alignment and finished surface of the curb and shall be removed after the concrete has developed initial set.

Expansion joints, using premoulded filler ¼ inch in thickness as previously specified, shall be located at all changes of grade, at ends of sections of curved curbing and elsewhere at intervals not exceeding 30 feet.

Concrete shall be placed within the forms in layers not exceeding 6 inches in depth and shall be thoroughly compacted and spaded as the pouring progresses. The top surface shall be accurately struck off and finished and the top outside edge of the curb shall be finished with an edging tool having a radius of ½ inch after the concrete has hardened sufficiently.

3.4.3.7 Finishing and Protection: The forms shall be removed within 24 hours after the concrete has been placed, unless otherwise directed, and the entire exposed surface of the curbing finished to a smooth even surface with a wooden float. Minor holes or defects shall be filled at once with mortar composed of one part Portland cement to two parts of sand applied with a wooden float. In no case will an application of a thin layer of mortar be permitted after the forms have been removed. The top and upper eight inches of the face of the curb shall be flushed lightly with clean water applied with a soft hair brush and finally finished to a hard, smooth surface with a steel trowel.

When completed, the curbing shall be kept moist and protected from sun and wind for a period of at least three days, using double layers of burlap, sisal-kraft paper or other approved material, properly weighted down, for this purpose. During cold weather, the Contractor shall in addition, protect the new curbing with salt hay, at his expense.

3.4.4 Stone Curbing

3.4.4.1 Straight Bluestone Curbing: Bluestone curbing shall be of the best quality bluestone, 5 inches or 6 inches in thickness, and 20 inches in depth, and in lengths

of not less than 4 feet nor in excess of 8 feet. The top surface shall be dressed and beveled at rate of 3/8 inch per foot, and the face shall be dressed to a depth of 12 inches, and the back to a depth of 4 inches. The top surface and face shall be free from depressions, projections, irregularities or defects.

3.4.4.2 Straight Granite Curbing: Granite curbing shall be of first quality granite, neither laminated nor stratified, hammer dressed on the face for at least 12 inches in depth, on the entire top surface, and 4 inches in depth on the back, with a top slope of 3/8 inch per foot up from front to back. All joints shall be close through the full depth and width of the stone. Eight inch curbing shall be 8 inches in width on the top, at least 20 inches in depth and not less than 10 inches in width at the base. Six inch curbing shall be 6 inches in width at the top, 20 inches in depth, and not less than 8 inches in width at the base. All straight curbing shall be in lengths of at least 6 feet except at closures where one piece not less than 4 feet in length will be permitted.

3.4.4.3 Curved Granite Curbing: Curved granite curbing shall be placed at all highway intersections where ordered. Curbed curbing shall be in lengths of at least 5 feet. No closure shall be less than 4 feet in length. It shall be cut exactly true to the radius ordered, with a tangent if required. Tangents cut on pieces of curved curbing will be paid for as curved curbing.

3.4.4.4 Expansion Joints: Expansion joints shall be placed as specified in Paragraph C-15.

3.4.4.5 Foundation: When directed there shall be placed under each curb joint a slab of Portland cement concrete 18 inches wide, 18 inches long and 8 inches thick. This material shall conform with the standard specifications for concrete for base course and will be paid for at the unit price bid in the proposal or indicated in the Schedule of Contingent Prices.

3.4.4.6 Joint Filling: Joints of curbing set by the Contractor shall not exceed 3/8 inch in width and shall be thoroughly pointed and backfilled and made water-tight from the base to top of curbing with a stiff mortar, composed of 1 part Portland cement and 2 parts of Type A or B sand.

3.4.5 Repairs to and Resetting Curbing

3.4.5.1 Resetting Curbing: All curbing shall be reset to lines and grades furnished by the District Surveyor. The Contractor shall at the price bid for resetting, adjust immediately adjoining curbing in such manner as to prevent any offset in the line. All joints shall be filled with mortar as specified for new stone curbing.

3.4.5.2 Redressing Stone Curbing: When directed the Contractor shall redress existing stone curbing on top and for a depth of not less than 10 inches on the face, together with such dressing of the ends as may be required to insure joints of the width specified. The work shall be paid for at the unit bid price.

3.4.5.3 Repairs to Concrete Curbing: Repairs to concrete curbing will include the removal and disposal of all unsound or disintegrated concrete and the renewal with new curbing 18 inches in depth in accordance with these specifications. The surface of the adjoining old concrete, if not at a joint, shall be thoroughly wetted and painted with neat cement grout prior to placing the concrete for the new curbing. When concrete curbing is to be reconstructed against an existing paying, the front form may be of wood, and shall extend from the top of curbing to the gutter.

3.4.5.4 Restoration of Footway Pavement: The price bid for resetting or repairing curb shall include the restoration in a substantial manner of the adjoining footway for the following widths measured from the inside edge of curb: Brick footway – 18 inches; concrete footway – 12 inches; flagstone footway – one flagstone. When necessary, this work shall include renewal of compacted sand base, 1 inch in thickness, for brick or flagstone and compacted cinders 4 inches in thickness for concrete footway.

3.4.6 Footway Pavement Generally

3.4.6.1 Scope of Work: The price bid for laying footway and alley pavements shall include excavation, compaction of subgrade, placing subbase, all materials, equipment and labor necessary for the construction of the pavement complete in place.

3.4.6.2 Excavating to subgrade shall include the removal and disposal of existing old pavement, unless otherwise specified.

3.4.7 Concrete Footway Pavement

3.4.7.1 Description: Concrete footway pavement shall consist of a slab 4 inches in thickness, unless otherwise specified, constructed in one course on a prepared subbase.

3.4.7.2 Subgrading: The footway shall be excavated or filled to the width required and to a subgrade 8 inches below and parallel to the finished grade. The subgrade shall be thoroughly by ramming or rolling. If the subgrade is in solid rock that requires blasting, the excavation shall extend not less than 8 inches below the finished grade at all points.

3.4.7.3 Materials: Portland cement concrete for one course concrete footway shall consist of 1:2:4 air-entrained concrete, using Type A fine aggregate and No. 2-B coarse aggregate. Materials and concrete mixtures shall conform to the requirements of paragraphs 3.1.3 to 3.1.3 and Table 3 of Standard Specifications for Paving and Repaving. Concrete as delievered to the work or deposited on the subgrade shall have a slump of 3 inches to 5 inches.

Expansion joint material shall consist of premoulded strips ¼ inch in thickness, having a width equal to the depth of the pavement and shall consist either of asphalt or non-extruding bituminous fiber.

3.4.7.4 Subbase: On the subgrade a subbase of clean cinders, 4 inches in depth shall be placed and compacted by ramming with a rammer weighing at least 25 pounds. The cinders shall be well watered during ramming. However, in footway repaving, broken concrete, broken brick, broken stone or other approved materials reclaimed from the existing pavement may be used partially in lieu of cinders. This material shall be graded not to exceed 1-1/2 inches in size, spread and tamped to a depth of 3 inches, over which shall be spread a layer of fine cinders in 1 inch in depth after tamping. The top surface of the subbase shall be brought to an elevation 4 inches below and parallel to the finished surface of the pavement and shall have a transverse grade 3/8 inch per foot unless otherwise directed.

3.4.7.5 Joints: Expansion joints ¼ inch thick, extending through the depth of the pavement, shall be constructed by placing premoulded expansion strips at house lines, around manholes or other structures in the footway, at changes in grade and elsewhere at intervals not exceeding 30 feet measured longitudinally.

Contraction joints having a depth of 2 inches and a width of ¼ inch shall be formed by scoring the pavement at intervals usually not exceeding 6 feet both longitudinally and transversely; except that under special conditions, as may be approved by the Engineer, the size of blocks resulting from scoring the pavement may be increased or diminished. These joints shall also be cut around poles, lamp posts, fire hydrants and other structures located in the footway so as to enclose areas of sufficient size to permit the opening of the footway for repairs without destroying the adjacent pavement.

All joints shall be neatly edged with a tool of 1/8 inch radius.

3.4.7.6 Construction Methods: At the time of depositing concrete the cinder subbase shall be thoroughly compacted and sufficiently moist to prevent absorption of water from the concrete. The concrete shall be spread on the subbase, compacted and screeded to the proper grade. When the concrete has firmed to a suitable consistency the surface shall be finished with wooden floats and slab shall be score with an approved device so as to produce contraction joints 2 inches in depth. Final finishing shall be with a wooden float and all joints and edges shall be rounded to a radius of 1/8 inch.

3.4.7.7 The finish of the completed pavement shall be gritty in texture and the use of a cement dryer in the finishing operation is prohibited.

3.4.7.8 Tinting: Coloring material of the shade and quantity to be approved by the Engineer shall be worked into the surface of the concrete when directed; except that coloring material may also be incorporated in the concrete mixing operation.

3.4.7.9 Protection of Pavement: Traffic shall be excluded from the newly completed pavement and the concrete shall be protected and cured for a period of not less than 3 days by the use of double thickness burblap or approved cotton or jute mats, kept wet throughout the curing period, or approved sisal-kraft paper, properly weighted down. When temperatures below 35 deg. F. are anticipated after the cessation of work the completed concrete shall be further protected by the use of a layer of salt hay not less than 6 inches in depth, properly weighed down. Unless otherwise specifically indicated in the proposal, the Contractor shall provide salt hay in cold weather at his own expense.

3.4.8 Concrete Driveways

3.4.8.1 Description: Concrete driveways across footways shall be light or heavy service type or suburban type as permitted or required by the regulations of the Department of Streets, or as specified in the proposal. The form and dimensions of these driveways shall conform to the detailed requirements of Standard Drawings L-197, L-197A, L-348 and L-349 for light and heavy services types and to the requirements of L-879 for suburban type. Light and suburban driveways shall be 6 inches in thickness and heavy service driveways 8 inches in thickness.

Applications for permits and the general construction of all driveways shall conform to the latest approved Regulations Governing Applications for Driveway Permits.

3.4.8.2 Materials: Portland cement concrete for driveways shall consist of 1:2:4 air-entrained concrete, complying with the requirements of Paragraphs 3.1.3 to 3.1.3 and Table 3 of Standard Specifications of the Department of Streets. Concrete as delivered to the work or deposited on the subgrade shall have a slump of 3 inches to 5 inches.

3.4.8.3 Expansion joint material shall consist of premoulded strips ¼ inch in thickness, having a width of equal to the depth of the driveway and shall consist either of asphalt or non-extruding bituminous fiber.

3.4.8.4 Construction Methods: The subgrade shall be compacted by rolling or ramming and shall be sufficiently moist to prevent absorption of water from the concrete.

The concrete shall be deposited in one course, thoroughly compacted and screeded to the proper grade. Final finishing shall be with a wooden float and all joints and edges shall be rounded to a radius of ¼ inch with an approved edging tool.

The finish of the completed driveway shall be gritty in texture and the use of a Portland cement dryer in the finishing operation is prohibited.

3.4.8.5 Curing and Protection: The completed driveway concrete shall be cured for a period of not less than 3 days by the use of double-thickness burlap or approved cotton or jute mats, kept wet throughout the curing period; or by the use of approved sisalkraft paper, properly weighed down; or by the application, uniformly over the entire surface, of an approved clear, non-bituminous membraneforming curing compound.

When required for protection against freezing temperatures, the driveway shall be covered with a 6-inch layer of salt hay by the Contractor at his expense.

Vehicular traffic shall be excluded from the driveway for a period of not less than three days after completion, or longer as may be required for proper strength under cold weather conditions.

3.4.8.6 Brick Footway on Concrete Base: The pavement shall consist of a new brick wearing surface 2-1/2 inches in depth, a cement-sand bed (1:4 mix) ½ inch in thickness, and cement grout joint filler (1:3 mix) to be constructed on a 1:2-1/2:5 Portland cement concrete base 4 inches in depth. The brick shall be straight, hard, first quality bricks.

The pavement shall be prepared and laid in accordance with the requirements of the Standard Specification of the Department of Streets for Curb Footways and for Paving and Repaving.

3.4.9 Footway and Driveway Repairs and Miscellaneous

3.4.9.1 Repairs to Concrete Footways: All repairs to concrete footway pavement shall include the removal and disposal of defective or disintegrated pavement and replacement in accordance with these specifications for Concrete Footway Pavement.

3.4.9.2 Repaving Brick Footway; This work shall consist of removing and disposing of existing worn out brick, shaping and compacting existing subbase, and laying now approved hard-burned brick, 2-1/2 inches in thickness on a 1 inch sand cushion.

3.4.9.3 Repairs to Brick Footway: This work shall consist in the removal of existing brick, proper shaping and compacting of existing subbase and relaying the best of existing whole brick on a 1-inch sand cushion. New brick shall be supplied for any deficiency and the area so laid will be paid for at the price bid for repaving brick footway.

3.4.9.4 Repairs to Flagstone Footway: Repairs to flagstone footway pavement shall consist of resetting the original flagstones on the existing foundation with sufficient sand added for bedding. The joints shall be filled with mortar composed of 1 part Portland cement and 2 parts clean sand. Flagstones that are shattered or

unsuitable in any way, shall be removed and replaced by concrete footway pavement or new flagstones.

3.4.9.5 Repairs to Block or Brick Driveway: Where the existing block or brick are in satisfactory condition, repairs to existing driveways may be made by removing the block or brick, reshaping and compacting the subgrade, supplying the new sand bed not less than 2 inches in thickness and repaving to the proper grade and surface. The joints shall then be swept full with approved sand.

3.4.9.6 Cinder Footway: Cinder footways shall be constructed of approved clean material to a uniform width of not less than 4 feet and to a depth of 4 inches after thorough compaction. Before placing the cinders the subgrade shall be graded to the prescribed subgrade. The cinders shall be moistened as required and thoroughly compacted by tamping to a hard and smooth surface. The cost of subgrading where necessary is included in the price for cinder footways.

3.4.9.7 Stop Boxes: All water stop boxes and sewer lateral vent boxes ordered replaced shall be new, in first class condition, and shall conform to the latest standards and regulations of the Philadelphia Water Department.

3.5 Surface Parking Lots

The following regulations pertaining to the surfacing of private parking lots are hereby promulgated by the Department of Streets pursuant to Section 8-407 of the Home Rule Charter and the Ordinance of Council approved March 17, 1965.

All lots, subject to Regulation under said Ordinance, shall be graded for satisfactory drainage. Any unstable material shall be removed, and replaced with suitable dry, granular material. The subgrade shall be rolled and compacted in accordance with paragraphs H-1 through H-8 of the 1954 Standard Specifications of Department of Streets.

All lots in excess of 2500 square feet shall be provided with suitable catch basins for surface drainage, to prevent discharge across sidewalks or driveway entrances; such catch basins to be connected to nearest City sewer.

After suitable subgrade has been established, the area shall be paved with a four (4) inch graded stone base and a two (2) inch bituminous concrete top course. The four (4) inch stone base shall be constructed in accordance with paragraphs H-64 through H-71, and the two (2) inch course of bituminous concrete shall be constructed in two layers in accordance with paragraphs H-96 through H-103 of the 1954 Standard Specifications of Department of Streets.

Upon proper notice from the Department of Licenses & Inspections, the applicant shall submit a plan, to the Department of Streets, showing location and dimensions of said parking lot. Upon approval of the plan, the applicant shall be required to obtain a permit (at no cost to the applicant) from the District Paving Engineer before construction is to start. This shall apply on new and existing lots.

3.6 City of Philadelphia Standard Specifications for Structure Concrete

3.6.1 Application

These specifications include materials, equipment and methods for the construction of plain and reinforced concrete structures, excluding paving and reIated work which are covered by the "Standard Specifications for Paving and Repaving."

3.6.2 Definitions and Abbreviations

"City" means the City of Philadelphia.

"Engineer" means the Chief Engineer of the Department of Streets. "Inspector" means the representative of the Engineer assigned to the inspection of materials and workmanship.

"Contractor" means the party to the second part of the contract.

"AASHO" means the American Association of State Highway Officials.

"ASTA" means American Society for Testing MateriaIs.

"Special Specifications" mean the specifications and plans which are part of the contract proposal.

"Current Specifications" mean the standard specifications and standards that are current at the date of advertisement for bids.

“ACI” means American Concrete Institute.

"PCI" means Prestressed Concrete Institute.

“AISI” means American Iron and Steel Institute.

"CRSI” means Concrete Reinforcing SteeI Institute.

"Structure Concrete" means the mixture of Portland cement, fine aggregate, coarse aggregate and water, plain or reinforced, with or without additives.

3.6.3 - Standards

Standard Contract Requirements for Public Works Contracts.

American Society for Testing Materials - Specifications and Tests.

American Association of State Highway Officials' Specifications.

American Concrete lnstitute - Manual of Standard Practice.

Concete Reinforcing Steel Institute - Code of Standard Practice; also called "Code".

Prestressed Concrete Institute - Standard BuiIding Code.

Except where modified by the speciaI specifications, the applicabIe standards of issue at the date of advertisement for bids, shall govern.

3.6.4 Drawings to be Followed

The approved drawings, cross sections and such supplemental detail and standard drawings as may be required for successful completion of the work show the location, details, and dimensions of the work contemplated. The contractor shall perform work in accordance with the intent of the drawings and specifications and shall take no advantage of any error or omission in the drawings or discrepancy between the drawings and specifications. The Engineer will make such corrections and interpretations as may be deemed necessary for the fulfillment of the specifications and the drawings. Any deviation from the drawings as may be required by the exigencies of the construction, will in all cases be determined by the Engineer and authorized in writing. Compensation for such changes shall be paid for at the contract unit prices bid, or if such unit prices have not been bid, will be paid for as a contingent item. If the additional work involved has not been covered as a unit price bid and is not considered as a contingent item, the price for this work will then be negotiated between the Engineer and the Contractor. Where a unit price or lump sum cannot be agreed upon by both parties, or where this method of payment is impractical, the Engineer may order the Contractor to do such additional work on a "Force Account" basis in accordance with the Standard Contract Requirements.

3.6.5- Sampling and Inspection

Ingredients of "Structure Concrete" shall be sampled by the methods of the current specifications of ASTM or AASHO.

Cement may be sampled at the mill or the job site. The City's representative shall have access at all avaiIable times to parts of the plants supplying materials under contract. The production, shipment, and placement of materials shall be subject to approval by the City. Acceptance or rejection of materials shall be based on laboratory tests and inspection at no cost to the City.

All rejected materials shall be removed from the site of the work.

3.6.6 – Testing Concrete

The Contractor shall provide facilities at the pl ant and job site for making slump tests and concrete test cylinders; and for storage of the test cylinders until their removal to the laboratory. Frequent tests will be made under control of the City to determine the quality of the concrete. The test cylinders will be transported by the City unless otherwise noted and compression tests made at the City Testing Laboratory. Where the tests show any amount of stress lower than the 28 day requirement for the particular class of concrete, the Engineer may condemn the concrete represented, and order its removal and replacement, with no additional compensation being allowed the Contractor for removal and replacement of inferior concrete. Tests will be made according to the current specificati ons of ASTM. All Required Tests by the Contractor for his own purposes wiII be made at his expense. The Contractor shall submit designs of mix for each class. These mixes shall be proved by preliminary tests at the City Laboratory 30 days before

concreting, and shall show a 28-day average strength 15 percent higher than the ultimate required.

3.6.7 Classes of Structure Concrete

Structure Concrete shall be classified as to the 28-day compressive strength. The following table is for normal concrete mixtures. Any deviations from these requirements will be described in the Special Specifications.

Class	28-day strength Pounds/Sq. in.	Type or Location of Structural Member	Cement Bags/C.Y. Minimum	Water Gal./bag Maximum	Fine Aggregate Percent by weight of total aggregate	Coarse Aggregate Maximum size	Slump (inches)
15	1500	Very massive unreinforced sections; concrete fills	4.3	7.5	34-40	2”	1-4
20	2000	Massive unreinforced sections; cradles; protective slabs, etc.	4.8	7.0	34-40	2”	1-4
25	2500	Footings; gravity walls; unexposed members.	5.25	6.5	33-38	1-1/2”	2-4
30	3000	Beams; girders; breast walls; shafts; parapets; bridge decks; cantilever walls.	5.75	6.0	32-38	¾”	2-5
35	3500	Cap beams of piers; rigid frames; structural decks supporting earth; arch ribs.	6.25	5.5	32-38	1-1/2”	1-3
40	4000	Structural members subject to corrosive attack.	6.6	5.5	32-38	1-1/2”	1-3
45	4500	Prestressed, post-	6.8	5.0	32-38	¾”	1-3

		tensioned members.					

50	5000	Bridge bearing blocks and pre-stressed pre-cast members	7.0	5.0	31-38	¾”	0-2-1/2”
55	5500	Pre-stressed, pre-cast members	7.4	4.5	30-38	¾”	0-2-1/2”
60	6000	Pre-stressed, pre-cast members	8.0	4.25	30-38	¾”	0-2-1/2”

NOTE: All concrete placed in water shall contain an additional 10 percent of cement, and the amount of water in the mix shall not exceed six (6) gallons per bag of cement.

All concrete mixtures shall be subject to modifications by the City may be determined by laboratory tests. The desired mixtures shall produce concrete of maximum density and minimum shrinkage during setting. Concrete shall be of a consistency for·complete embedment of steel and for effective placement in the forms.

SUGGESTED TRIAL BATCH RATIOS FOR CONCRETE MIXES*

Class	Ratio (by weight)	Cement lbs.	Cement sacks	Sand lbs.	Stone lbs.	Water gal.	W/C
15-1	1:3.12:5.30 1:2.97:5.06	404 423	4.30 4.5	1258 1258	2142 2142	32.2 32.6	7.5 7.25
20-1	1:2.75:4.68 1:2.64:4.49	451 470	4.80 5.00	1240 1240	2110 2110	33.6 33.7	7.0 6.75
25-1	1:2.40:4.36 1:2.29:4.16	493 517	5.25 5.50	1184 1184	2151 2151	34.1 34.4	6.50 6.25
30-1	1:2.09:3.88 1:2.00:3.76	542 565	5.75 6.00	1132 1132	2103 2103	34.5 33.0	6.0 5.5
35-1	1:1.90:3.54 1:1.83:3.40	588 611	6.25 6.5	1120 1120	2080 2080	34.4 34.1	5.5 5.25
40-1	1:1.80:3.33 1:1.74:3.23	620 639	6.6 6.8	1113 1113	2067 2067	36.3 35.7	5.5 5.25
45-1	1:1.72:3.21 1:1.67:3.11	639 658	6.8 7.0	1102 1102	2048 2048	34.0 32.9	5.0 4.7
50-1	1:1.64:3.12 1:1.57:2.98	658 689	7.0 7.33	1080 1080	2050 2050	32.9 33.0	4.7 4.5
55-1	1:1.50:2.91 1:1.43:2.77	695 728	7.40 7.75	1040 1040	2020 2020	32.6 32.9	4.5 4.25
60-1	1:1.37:2.66 1:1.33:2.58	751 775	8.0 8.25	1030 1030	2000 2000	34.0 33.0	4.25 4.0

*Additives and Admixtures shall be as noted in the Special Specifications.

3.6.8 Materials

3.6.8.1 Governing ASTM or AASHO Designations are given for the following materials:

Material	ASTM or AASHO Designation
Air Entraining Admixtures for Concrete	C-260
Air Entraining Portland Cement	C-175
Asbestos Bearing Pads	ASTM D-733 (Tests)
Asphalt Waterproofing	D-449, Type A
Asphalt Waterproofing Primer	D-41
Calcium Chloride	D-98
Canvas & red lead Masonry Plate Bedding	ASTM D-230
Cast-Iron Pressure Pipe	A-377
Coarse Aggregate	C-33 Gravel or Crushed Stone
Copper Water Stop	B-152, Type A
Fine Aggregate	C-33, Natural Sand
Joint Sealer, Hot Poured	D-1190
Liquid Curing Compound	C-309, Type I
Neoprene Bearing Pads	ASTM D-15, Part B
Neoprene Sponge Pads (closed cellular)	ASTM D-1056 & D-1171
Portland Cement	C-150
Preformed Expansion Joint Filler (Bituminous)	D-1751 (AASHO M 33)
Preformed Expansion Joint Filler (Non-Bituminous)	D-1752
Preformed expansion Joint fillers (Non-extruding and resilient types)	AASHO-M-153
Ready Mixed Concrete	C-94
Reinforcing Steel	ASTM A-432 & A-305 & A-431
Saturated Cotton Fabric	D-173
Sheet Lead	ASTM B-29
Sheet Zinc	ASTM B-69
Steel Bar or Rod Mats	A-184
Steel Wire	A-82
Steel Wire Fabric	A-185
Stress Relieved Strand	A-416
Stress Relieved Wire	A-421
Structural Steel	A-7
Waterproof Paper (Curing)	C-171

Application for Non-City specifications should be made to the issuing organization.

3.6.8.2 Portland Cement: Shall conform to the current ASTM Designati on C-1 50 for Type I, Type II and Type III. ·

Air entraining Portland Cement shall conform to the current ASTM Designation C-175.

Slag cement shall not be used.

Portland cement shall be of the type specified for the job but unless otherwise specified, Type I cement shall be used. Only one brand of cement, as approved by the Engineer, shall be used for the contract construction.

3.6.8.3 Fine Aggregate shall be natural sand conforming to ASTM C-33.

The Engineer may approve other inert materials of similar characterstics. Sampling and testing shall conform to current specifications of ASTM. The Fineness Modulus shall be between 2.50 and 2.90. (The fineness modulus is the sum of the percentages coarser than each sieve divided by 100, using standard sieve sizes Nos, 100, 50, 30, 16, 8 and 4). Grading shall conform to the following:

Sieve Size	Percnetage by Weight (Passing)
3/8 inch	100
No. 4	95-100
No. 8	70-90
No. 16	45-75
No. 30	25-55
No. 50	8-30
No. I00	1-5

3.6.8.4 Coarse Aggregate shall conform to ASTM designation C-33 for gravel or crushed stone. Coarse aggregate from only one source shall be used on the contract, as approved for kind and gradation for the work. Blast furnace slag shall not be used. Grading shall conform to the following:

Percent Passing for Given Maximum Sizes of Aggregate

Sieve No.	¾ inch	1-1/2 inch	2 inch
2 inch		100	95-100
1-1/2”		95-100	
1”	100		35-70

¾”	90-100	35-70	
½”			10-30
3/8”	20-55	10-30	
No. 4	0-10	0-5	0-5
No. 8	0-5		

The maximum size of coarse aggregate to be used for the work shall not be larger than one-fifth of the narrowest dimension between forms, nor larger than one-half of the clear space between reinforcing bars,

3.6.8.5 Water shall be potable; and shall be clean and free from Injurious amounts of oil , acid, alkali, or organic matter,

3.6.8.6 Air Entrained Concrete. Air entrainment shall be accomplished by the introducing of an air-entraining admixture (ASTM C-260) into the concrete mixture which contains Types I, II and III Portland cement. The range of air entrainment shall be between 3 percent and 5 percent of the volume of concrete.

3.6.8.7 Ready Mixed Concrete shall conform to the current specificati on of ASTM C-94 except that Central -Mixed Concrete only shall be used on the contract construction.

3.6.8.8 Accelerators for concrete, mortar and grout shall be approved for use by the Engineer, in proportions as directed by the Engineer and by the manufacturer.

3.6.8.9 Water Reducing Additives shall be the product of established manufacturers in this field, who have had a record of successful performance.

The quantity and method of use shall be in accordance with the manufacturer's directions. No modification shall be made to the normal concrete design mixture, except the reduction of water content permitted by use of the additive. The water reducing additive shall increase the normal 28-day compressive strength of the concrete by at least 10 percent.

3.6.8.10 Retarding Densifier may be either in a powder or a liquid form. The product shall be made by a well-known manufacturer; and shall have been in production and use for a period of not less than 2 years. The material shall have been tested to indicate an increase in the normal 28-day compressive strength of the concrete in which it will be used. No displacement of cement will be permitted in concrete mixtures where the retarding densifier will be used. The proportioning and use of the material shall be in accordance with the manufacturer's directions.

3.6.8.11 Joint Sealers shall be as specified and rnay be hot-poured in accordance with ASTM D-1190 or may be cold applications of Thiokols, Epoxies and other

products of proven value for the work. Samples shall be submitted to the Engineer for approval.

3.6.8.12 neoprene Sponge Pads {closed cellular) shall be made from the compound as Neoprene and may be fabricated as sponge neoprene or expanded neoprene and shall have the properties listed below:

Physical Properties

Compression Deflection. ASTM D-1056-58T

Pressure necessary for 25% deflection - 10 to 5 psi One layer – ½" thick pad @ 70 deg. F. +/- 5°

Compression Set. ASTM D-1056-58T

Maximum Compression Set after 50% deflection for 22 hrs. 20% One layer – ½" thick pad. Thickness measured @120 deg. F. after 24 hrs, rest at 120 deg. F. temperature.

Water Absorption by Weight. Maximum increase in weight. ASTM D-1056 Suffix L Maximum increase in weight 10%.

Low Temperature Test. ASTM D-1056 -58T Suffix F ½" thick pad. Percentage change C = 65% maximum.

Accelerated Aging Tests. ASTM D-1056-58T D573

The rubber shall be Type S. ASTM. D-1056-58T

Pads may have skin on any side or no skin.

Weather resistance. ASTm. D-1171-57T. Quality Retention 100% - 6 weeks.

3.6.8.13 Concrete Sealers for Surface Treatment shall be transparent, colorless liquids having a silicone base, or equal, as approved by the Engi neer.

3.6.8.14 Asphalt Curing Compound shall be either a cut-back asphalt or an emulsified asphalt. Asphalt cut-back shall be an asphalt cement compounded with a surfable volatile naptha. The product shalk conform to the requirements of rapid curing oi1, Grade RCO), ASTM, specification D-597; except that the furol viscosity, as determined at 77 degrees F. shall not exceed 120 seconds.

3.6.8.15 Asphalt Emulsion shall meet the following requirements:

Viscosity, saybolt furol at 77 deg. F.; Sec.

Distillation:	Minimum	Maximum
Asphalt cement, percent by wei ght	45	55
Water, percent by weight	45	55

Residue from distillation		
Specific gravity 77/77 deg. f.	1.0	
Penetration at 77 deg. F; 100 gr; 5 sec.	100	200
Ductility at 77 deg. F; CMS	40	
Solubility in cs_2, percent by weight	95	
Ash, percent by weight		2.0

3.6.8.16 Asbestos bearing pads shall be composed of asbestos fibers and compound of synthetic rubber. This shall be bonded under pressure to form a compressible sheet. Bearing pads shall be similar to bridge pad material as manufactured by·Keosbey and Mattison Company or an approved equal, and shall meet the following specifications:

Color: Gray

Thickness: l/4" plus or minus 10 percent

Finish: One face of the bridge pad shall have a graphited impregnated surface.

Weight: Nominal weight per squre yard 21 pounds. Tolerance: +/- 10 percent.

Physical Properties:

Compressibility: 5000 psi load, 12 plus or minus 5 percent.

Recovery Minimum 40 percent

Density: Pounds per cubic foot (lbs./cu. Ft.) 112 +/- 4 percent.

Oil Resistance:

ASTM No. 1 oil, 5 hours at 300 deg. F.

Compressibility Maximum 35 percent

Thickness change Maximum 15 percent

ASTM No. 3 oil, 5 hours at 3oo deg. F.

Thickness change Maximum 60 percent

Fuel Resistance:

ASTM No, 1 Fuel; 5 hours at room temperature

Thickness change 0 to plus 25 percent

Tests: All tests for the determination of the physical properties shown, shall be made in accordance with ASTM Designation D-733-53T procedures.

3.6.8.17 Non-Bituminous Curing Compound shall conform to ASTM Specification C-309, Type I.

3.6.8.18 Neoprene Bearing Pads - The pads shall be of the compound known as Neoprene and shall be cast in molds under pressure and heat. Compositions for pads shall meet the requirements listed. Test specimens shall be in accordance with ASTM Designation D-15, Part B.

Physical Properties

Grade (Ourometer)		60	70
Original Physical Properties			
Hardness	ASTM D-676	60 +/- 5	70 +/- 5
Tensile strength, minimum psi	ASTM D-412	2500	2500
Elongation at break, minimum %		350	300

Accelerated tests to determine Long-Term Aging Characteristics

Oven Aged-70 Hours / 212 deg. F. ASTM D-573

	60	70
Hardness, Points Exchange, Maximm	0 to +15	0 to +15
Tensile Strength, % change Maximum	+/- 15	+/- 15
Elongation at break, % change, maximum	-40	-40

Ozone – 1 PPM in Air by Volume – 20% Strain – 100 deg. F. + 2 deg. ASTM D-1149*

100 hours	No cracks	No cracks

*Samples to be solvent wiped before test to remove any traces of surface impurities.

Compression Set – 22 hours/158 deg. F. ASTM D-395 – Method B.

% Maximum	25	25

Low Temperature Stiffness – ASTM D-797 at -40 deg. F., Young's Modulus, maximum:

Psi	10,000	10,000

Tear Test – ASTM D-624 – Die "C".

Pounds/lin. In., minimum	250	225

Shear Modulus Test

Test specimen size: Thickness ½" minimum, width (6 to 10) x thickness, length (15 to 30) x thickness.

Temperature at Testing: 68 deg. F., +/- 5 degrees.

Test Procedure• The speci men shal I be subjected to 500 psi compression and di splaced hori zontal l y along the short si de wi th hori zonta l forces appl i ed to pro- duce a shear deformati on of 50% of the th i ckness,

The horizontal force and the horizontal displacement shall be measured,

$$\text{Shear Modulus} = \frac{\text{Force}}{\text{Bearing Area}} \qquad \frac{\text{Displacement}}{\text{Pad Thickness}}$$

Shear Modulus shall be 160 +/- 15 psi 215 +/- 20 psi

3.6.8.19 Burlap shall be not less than 7 ounces per square yard.

3.6.8.20 Cotton or Jute Mats shall be one-ply sheets of cotton felt; jute felt or other approved filler suitably covered on both sides with burlap or coarse cotton fabrics The covering material shall extend 4 inches beyond the edge of the filler in one end and one side to provide a flap for over-lapping adjacent mats as placed on the concrete. Reclaimed materials shall not be used. Filler and covering material shall be satisfactorily interwoven, stitched or tufted to prevent displ acement of the filler. The covering material for the flaps shall be stitched together. The mats, exclusive of the flap, shall weigh not less than 22 ounces per square yard when dry. The covering material shall weigh not less than 6 ounces per square yard when dry. The filler material shall weigh not less than 10 ounces per square yard when dry. The mats shall absorb at least twice their weight of water and after being exposed on a non-absorbent surface free from direct rays of the sun with a relative humidity of 60, at a temperature of 70 degrees F., for 6 hours, the weight of the retained water shall be not less than the dry weight of the mat. The maximum size of the mats, exclusive of the flaps, shall not exceed 72 square feet.

3.6.8.21 Paper Covers shall be made of two (2) sheets of 100 percent sulphate kraft paper, each sheet testing not less than 30 pounds, Mullen test, and cemented together with a suitable bituminous cement. Reinforcement, completely embedded in the bituminous cement shall be unspun fibre, glass fibre, jute, or cotton yarn mesh. Paper covers shall be pre-treated to resist shrinkage. When tested in accordance with ASTM Method D-828, the covers shall meet the following requirements:

Pounds per Inch of Width

	Machine Direction	Cross Direction
Tensile strength (dry)	70	50
(wet)	30	20

3.6.8.22 Form Coating shall be an approved oil or colorless proprietary product.

3.6.8.23 Metal Bar Supports Ties and Spacers shall be of steel, of an approved design, and adequate to insure against displacement of the reinforcement during the course of construction.

3.6.8.24 Bar Mats shall be fabricated from reinforcement bars, Intersections shall be fastened securely by welding or by approved mechanical ties.

3.6.8.25 Neoprene Tubing shall be made from the compound known as Neoprene.

Physical Properties

durometer hardness	40 to 70
Tensile strength	1000
Ozone I PPM.in Air by Vol ume	20% strain – 100 deg. F. +/- 5 degrees
100 hours	no cracks

3.6.8.26 Preformed Fabric Pads shall be composed of multiple layers of 8-ounce cotton duck impregnated and bound with high-quality natural rubber or of equivalent and equally suitable materials compressed into resilient pads of uniform thickness. The number of plies shall be such as to produce the specified thickness, after compression and vulcanizing. The finished pads shall withstand compression loads perpendicular to the plane of the laminations of not less than 10,000 pounds per square inch without detrimental reduction in thickness or extrusion.

3.6.9 Storage of Materials

3.6.9.1 Cement shall be stored immediately upon receipt at the site of the work in suitable weather-tight buildings. Cement in sacks shall be stored in buildings as air-tight as possible with floors elevated above ground sufficiently to prevent absorption of moisture. Sacks shall be stacked as close as possible, but not adjacent to outside walls. The manner of storage shall permit easy access for inspection and identification·of each shipment. The earliest stored cement shall be used first, and the sequence of use shall follow the sequence of storage throughout the contract. On small jobs, storage in the open will be permitted, provided that cement is stored on a raised platform and is amply covered with water proofed canvas. Bulk cement shall be transferred to air-tight and weather-tight bins. At the time of use, all cement shall be free-flowing and free of lumps. The Inspector shall have easy access to the storage areas. The Contractor shall keep accurate

records of deliveries and use. Copies of such records shall be supplied to the Engineer, as may be required.

3.6.9.2 Concrete aggregates shall be stored on areas covered with hard, clean material, and in a manner to avoid the inclusion of foreign material. Aggregates shall be stored in separate plies or bins according to size or gradation, as required. Coarse graded aggregate piles shall be built in horizontal layers not exceeding 4 feet in depth. Aggregates shall be stock-piled or binned at least 72 hours before use, to allow ample time for Inspection and testing.

3.6.9.3 Reinforcement and Metal Products shall be stored in a manner that will avoid excessive rusting, corroding, or coating by grease, oil, dirt and other objectionable materials. Separate piles or racks shall be used to preserve identification of the stored materials.

3.6.9.4 Admixtures shall be stored in a manner that will not damage the containers. The manufacturers directions shall be followed regarding handling, temperature requirements, re-test ing and other necessary precautions for storage of the products.

3.6.9.5 Miscellaneous Construction Materials shall be stored in a manner to prevent loss or injury, and to be readily available for installation at the required times.

3.6.10 Proportioning and Mixing Concrete

3.6.10.1 Proportions: All concrete shall be proportioned by weight unless otherwise specified for the required compressive strengths. The Contractor shall design the concrete mixtures within the limits shown herein for the various ingredients. The mixtures will be tested by the City. In the event that the required compressive strength is not obtained by test, the Contractor shall make such approved modifications to the design mixture as to obtain the required strength. Re-tests shall be made until a suitable concrete mixture is designed for the required compressive strength.

For air entrained concrete, the approved normal mixture shall be modified and designed for the given strength.

For additives, those used for other than water reducing and air-entraining, no account shall be taken in the original design mixture for possible increase in the 28-day compressive strength due to the additive. For water reducing additives, the only modification to the original design mixture shall be the permitted reduction in water content.

3.6.10.2 Equipment shall be as specified by ASTM C-94, except that truck mixers shall not be used. Equipment shall be modern and dependable, shall be maintained in good condition, and shall be subject to approval. The amount of equipment and

the sizes of the units shall be adequate to meet the approved plan and schedule of concrete operations. The producer shall provide test weights for calibrating and testing the measuring devices, and shall make corrections required to secure satisfactory performance. Accuracy of all measuring devices shall be such that successive quantities can be measured to within one percent of the desired amount. Mechanical dispensers, as approved, shall be used for the inclusion of liquid or dry additives in the concrete mixture. Mechanical dispensers shall be periodically inspected and calibrated.

3.6.10.3 Mixing of Concrete: All concrete shall be machine-mixed in a stationary mixer, and transported to the delivery site in a truck agitator. For work at pre-cast concrete plants, the transportation from mixer to forms may vary from above, if approved by the Engineer.

Mixing shall comply with the ASTM current specifications for Ready-Mixed Concrete. The plant shall provide all the necessary facilities for inspection of materials and manufacturing processes and the testing of the finished concrete.

A delivery ticket for each truck load of concrete shall be given to the City Inspector at the job site. The ticket shall be signed at the plant by the plant inspector, and shall show the exact time that water was added to the mix, the class of the concrete, the volume, and any modifications to the normal approved mixture.

One and one-half (1-1/2) hours shall be the maximum time consumed from the time of adding water at the plant to the time of pouring at the job. The delivery time for trucks shall be such as to provide for proper handling and placing.

3.6.11 Forms and Centering

3.6.11.1 General: Forms shall conform to the shape, lines and dimensions of the concrete as required by the plans. Forms shall be of wood, steel or other approved material. They shall be of a type, size, shape, quality and strength that will produce true, smooth lines and surfaces in accordance with the plans. Lumber for forms shall be dressed to uniform thickness.

Detailed plans for centering and falsework, when specified or directed, shall be prepared by a Registered Professional Engineer and submitted for approval by the Engineer, but in no case shall the Contractor be relieved of any responsibility for any failure or damage by such approval. Construction of centering shall not be commenced until the plans or method therefore have been approved. Centering shall be framed for a rise slightly greater than the rise indicated on the drawings as an allowance for settlement and for deflection. Provisions shall be made to facilitate gradual and uniform lowering.

The Engineer may require the Contractor to employ screw Jacks or hard-wood wedges to take up any settlement in the formwork either before or during the placing of concrete.

Falsework which cannot be founded on a satisfactory footing shall be supported on piling which will be spaced, driven and removed in a manner approved by the Engineer.

Arch centering and other falsework shall be constructed in accordance with approved centering plans, with provisions made for the gradual lowering of the centering, and placement of approved jacks for slight settlement if required, after placement of concrete. Forms shall not be used when they are warped, cracked, or when they have misaligned surfaces, or are structurally defective.

3.6.11.2 Construction: Forms shall be constructed mortar tight and shall be made sufficiently rigid by the use of ties and bracing to prevent displacement or sagging between supports, and to withstand the action of mechanical vibrators and other forces due to the nature of the work. Edges shall be chamfered. If not shown otherwise, the chamfer shall be one inch. Where square corners are shown, they shall be rounded slightly with an abrasive stone.

Form ties shall have a minimum working strength, when fully assembled, of at least 3000 pounds. Wire ties shall not be used. Ties shall be adjustable in length and of a type as to leave no metal in the concrete within 1 inch of any surface and they shall not be fitted with devices which act as spreaders or for any other purpose which will leave holes larger than 7/8 inch in diameter or depressions back of the·exposed surface of the concrete.

The forms shall be coated, before reinforcement is placed, with a colorless, non-staining liquid form coating, as approved by the Engineer.

Forms of considerable height shall be provided with openings or other devices for placement of concrete other than dumping at the top.

3.6.12 Handling and Placing of Concrete

3.6.12.1 General: The Contractor shall furnish and place all reinforcement bars and other reinforcing materials as shown or required, with approved ties, chairs, spacers, supports and other devices necessary to fix the reinforcement firmly in position. The reinforcement and metal supports shall be free of loose, flaky rust and other deleterious substances when placed.

No bricks, cinder blocks, wood blocks or porous substances shall be used for supports.

All debris shall be removed from the interior of the forms. Water shall be removed from the space to be occupied by concrete unless otherwise directed by the Engineer. Any flow of water shall be diverted by means of side drains to a

sump, or be removed by other approved methods which avoid washing the freshly deposited concrete.

The forms and reinforcement shall be inspected immediately before any concrete is poured. The slump of the concrete shall be measured at the start of the work and at intervals during progress of the work. Only concrete of the proper consistency shall be placed in the forms.

Concrete shall be conveyed by approved methods which will not cause segregation or loss of materials. It shall be deposited in the form as nearly as possible to the final position to avoid rehandling, and shall not have a free fall greater than 4 feet unless otherwise permitted by the Engineer. Chutes and troughs shall not be used except such devi ces that are accessory to concrete handling equipment. Where placing operations require a drop of more than 4 feet, the concrete shall be deposited through pipes of metal, canvas or other approved material.

Concrete shall not be placed when weather conditions prevent proper placement and consolidation. All concrete shall be placed in the dry unless permitted otherwise by the special specifications. Sub-grades of earth or other contaminating material shall be covered with building paper or other approved material. Porous sub-grades shall be dampened. No extra payment will be made for building paper, concrete seal, stone seal or other preparatory work needed to secure a proper foundation on the sub-grade.

Placing operations shall be continuous until the section between designated construction or expansion joints is completed. Concrete shall be deposited in layers from 12 to 24 inches deep, and worked around reinforcement, embedded fixtures and into corners and angles. For concrete which wi11 be vibrated, the layers should project somewhat higher at·ends and corners. Each layer shall be placed before the preceding layer has taken initial set. On the bottom of beams and slabs where the congestion of steel makes placing difficult, a one-inch layer of mortar, of approved composition, shall be deposited before placing the concrete.

Water which accumulates on the surface of the concrete during placing shall be removed by blowing or by absorption with porous materials. Visible joints on exposed faces shall be avoided by the use of grade strips, or other approved method. Feather edges shall be blocked out for sections of the work and for the finished work. The maximum length for pouring wall sections shall be 30 feet. Slabs shall not be poured until the supporting walls and columns have settled for two hours. The concrete shall be placed in alternate sections as shown on the plans, or as directed by the Engineer.

Laitance and other objectionable material shall be removed from the finished work. Accumulations of dust, mortar chips, and other foreign substances shall be

removed before the concrete has set. Projecting reinforcement shall be cleaned and coated with a cement wash, except when the adjoining concrete will be poured within one week.

3.6.12.2 Vibration: All concrete shall be compacted with high frequency, internal, mechanical vibrating equipment supplemented by hand spading and tamping. For pre-cast work, approved external vibrating equipment may be used in combination with internal vibrators. The internal vibratory element shall be designed to operate submerged in the concrete, and shall have a frequency of not less than 6000 impulses per minute when submerged. Equipment shall be adequate in number and power to consolidate the concrete properly. Vibrators shall not be used to transport the concrete in the forms. They shall be manipulated slowly and in the areas of freshly deposited concrete and at a rate to prevent the formation of localized grout. Vibration of forms and reinforcement shall not be employed unless specifically authorized.

The number and size of vibrators should be such as to insure vibration throughout the entire volume of concrete to be vibrated. Application of vibrators should be at points uniformly spaced and not farther apart than the radius over which vibration is visibly effective. The vibration should be such that the concrete becomes uniformly plastic.

3.6.12.3 Construction Joints: When not otherwise shown, construction joints shall be provided at a·-maximum spacing of 30 feet. The procedure specified in Section 3.6.12(e) for bonding new concrete to old, shall be followed in the formation of all joints. Keys and dowels shall be used unless otherwi se specified or shown on the plans.

3.6.12.4 Temperature: Concrete, when deposited, shall have temperatures within the limits shown in the following table:

Temperature of Air (Degrees F.)	Concrete when placed (Degrees F.)
Below 30	65 Min – 90 Max
Between 30 and 45	65 Min – 90 Max
Above 45	50 Min – 100 Max

The method of heating the materials shall be approved by the Engineer. The apparatus used shall heat the mass uniformly and preclude the occurrence of hot spots.

When the ambient temperature is more than 90 degrees F.; or if directed by the Engineer, moist curing shall begin as soon as surface of the fresh concrete has set initially. Initial curing shall be by the moist method regardless of the type or method of subsequent curing.

3.6.12.5 Bonding: Immediately before depositing new concrete on or against concrete which has hardened, the surface shall be roughened, cleaned of foreign matter and saturated with water for at least one hour prior to placing. The wet surface free of excess water shall be slushed with mortar before placing concrete. Proprietary approved products which are of proven worth may be used as bonding agents, approved as directed by the Engineer.

3.6.12.6 Culverts: The base slab or footings of culverts shall be. placed and allowed to set for at least 24 hours before the remainder of the culvert is constructed. Raised keys and dowels shall be provided for bonding to the side walls. For box sections, the side walls and top slab shall be constructed as a monolith. Constructi on joints shall be vertical and at right angles to the axis of the culvert, unless otherwise shown. Each wing shall be constructed as a monolith unless otherwise shown.

3.6.12.7 Slabs, Beams, Girders and Columns. Concrete shall be deposited by beginning at the center of the span and working from the center toward the ends, unless otherwise noted.

Concrete in girders shall be deposited uniformly for the full length and brought up evenly in horizontal layers. Concrete in girder haunches less than 3 feet in height shall be placed at the same time as that in the girder stem, and the supporting concrete shall have been formed to provide seats for the haunches. When the haunch is 3 feet or more in height, the haunched section shall be a separate intermediate pour between the abutment, or other supporting masonry, and the girder.

Concrete in slab spans shall be placed in one continuous operation for each span unless otherwise provided.

Concrete in columns shall be placed in one continuous operation and shall have set at least 12 hours before column caps are poured. Concrete in the superstructure shall not be placed until the supporting concrete has attained adequate strength as determined by concrete cylinder tests.

3.6.12.8 T-Beam or Deck Girder Spans: Concrete may be placed in one continuous operation, or the girder stems may be placed prior to the deck, in which case the bond between the girder and slab shall be positive and mechanical with suitable shear keys in the top of the girder stem. The plans will indicate the location and details of the keys.

3.6.12.9 Arches: The concrete in arches shall be placed in a manner to load the centering uniformly. Preferably, arch rings should be cast in transverse sections of such size to allow for placing each section in a continuous operati on. The contractor shall submit, for approval, his sequence of pouring and all details connected therewith.

3.6.12.10 Prepakt Concrete: This concrete is made by packing the forms with an approved coarse aggregate and then pumping in a cement-base intrusi on mixture to fill the voids under pressure. Equipment shall be specially designed and approved for this type of work.

Materials and methods will be appropriate for the job and will be described in the job specification.

3.6.12.11 Pneumatic Placing: Pneumatic placing of concrete will be permitted only if specified in the Special Specifications or authorized by the Engineer. The equipment shall be so arranged that no vibrations will be created which might damage freshly placed concrete.

Where concrete is conveyed and placed by pneumatic means, the equipment shall be suitable in kind and adequate in capacity for the work. The machine shall be located as close as practicable to the place of deposit. The position of the discharge end of the line shall not be more than 10 feet from the point of deposit. The discharge lines shall be horizontal or inclined upwards from the machine. At the conclusion of placement, the entire equipment shall be thoroughly cleaned.

3.6.12.12 Pumping: Placement of concrete by pumping will be permitted only if specified in the Special Specifications or if authorized by the Engineer. The equi pment shall be so arranged that no vibrations will be created which might damage freshly placed concrete.

Where concrete is conveyed and placed by mechanically applied pressure, the equipment shall be suitable in kind and adequate in capacity for the work. The operation of the pump shall be such that a continuous stream of concrete without air pockets will be produced. When pumping is completed, the concrete remaining in the pipeline, if it is to be used, shall be ejected in such a manner that there will be no contamination of the concrete or separation of the ingredients. After this operation, the entire equipment shall be thoroughly cleaned.

3.6.12.13 Depositing Concrete Under Water: Concrete shall not be deposited in water except with the approval of the Engineer and under his immediate supervision. The method of placing shall be as hereinafter designated.

Concrete deposited in water shall be the class as specified, with 10 percent excess cement. To prevent segregation, it shall be carefully placed in a compact mass, in its final position, by means of a tremble, a bottom dump bucket or other approved method, and shall not be disturbed after being deposited. Still water shall be maintained at the point of deposit; and the forms under water shall be water-tight. Concrete shall not be deposited in running water or in water having a temperature below 35 degrees F.

For parts of structures under water, when possible, concrete seals shall be maintained continuously from start to finish, the surface of the concrete shall be

kept as nearly horizontal as practicable at all times. To insure thorough bonding, each succeeding layer shall be placed before the preceding layer has taken initial set.

A tremie shall consist of a tube having a diameter of not less than 10in-inches, constructed in sections having flanged couplings fitted with gaskets. The tremies shall be supported in a manner that will permit free movement of the discharge end over the entire top surface of the work and the rapid lowering when necessary to retard or stop the flow of concrete. The discharge end shalI be closed at the start of work to prevent water entering the tube and shall be entirely sealed at all times. The tremie tube shall be kept full to the bottom of the hopper. When a batch is dumped into the hopper, the flow of concrete shall be induced by slightly raising the discharge end, always keeping it in the deposited concrete. The flow shall be continuous until the work is completed.

Depositing of concrete by the drop bottom bucket method shall conform to the following specification. The top of the bucket shall be closed. The bottom doors shall open freely downward and outward when tripped. The bucket shall be completely filled and slowly lowered to avoid backwash. It shall not be dumped until it rests on the surface upon which the concrete is to be deposited, and when discharged shall be withdrawn slowly until well above the concrete. The slump of concrete shall be kept as low as practicable.

Bags filled with approved dry concrete mixture may be placed by divers or mechanical means in the initial stage of placing the concrete seal or for the complete seal, as directed.

Unwatering may proceed when the concrete seal is sufficiently hard and strong, All laitance or other unsatisfactory material shall be removed from the exposed surface by scraping, chipping or other means which will not injure the surface of the concrete.

3.6.12.14 Concreting in Cold Water: When it is anticipated that the air temperature may reach 35 degrees F. or lower within 24 hours following the scheduled time for pouring concrete, or when concrete is being placed at temperature below 35 degrees F., the mixing water and the aggregates shall be heated.

The depositing of concrete in cold weather will be permitted provided the methods of heating the materials and protecting the concrete during transportation and after pouring are approved by the Engineer. No concrete shall be placed on a frozen sub-grade. When the bulk of the aggregates have a temperature below 45 degrees F. they shall be heated to at least 70° but not more than 150°F. Water for mixing shall not be heated to more than 150 degrees F. Concrete, when placed in the forms shall have a temperature range as shown under Section (d) Temperature: 3.6.12 - Handling & Placing of Concrete. Freshly placed concrete

shall be maintained at a temperatore of not less than 60 deg. F. for a minimum of 5 days for normal concrete and 70 deg. F. for a minimum of 3 days for high early strength concrete. Heati ng may be done with either steam or dry heat; this does not relieve the Contractor of responsibility for curing as specified herein. When dry heat is used, means of maintaining atmospheric moisture shall be provided. The Contractor shall supply the heating apparatus, stoves, salamanders or steam equipment and the necessary fuel. Flame throwers or other open direct heating devices will not be allowed in the mixer.

When ordered by the Engineer, not more than 2 pounds of calcium chloride per sack of cement may be added to the concrete mixture. The calcium chloride shall be added in liquid form. One (1) quart of solution shall contain one (1) pound of calcium chloride and the liquid shall constitute part of the total water permitted by the various water-cement ratios. No extra payment will be made for calcium chloride so used; and·it is not to be used except when specifically ordered in writing by the Engineer.

3.6.12.15 Rubble or Cyclopean Concrete: Shall consist of Class 15-2 concrete, containing large embedded stones. It shall be used only in massive piers, gravity abutments, and heavy footings when shown on the plans. The stone for this class of work may be one-man stone or derrick stone.

The stone shall be carefully placed, not dropped or cast, to jury to the forms or to the partially set adjacent concrete, stone shall be placed upon its natural bed. All stone shall be washed and saturated with water before placi ng.

The total volume of the stone shall not be greater than one-third of the total volume of the portion of the work in which it is placed. For walls or piers greater than two (2) feet in thickness, one-man stone may be used; each stone shall be surrounded by at least six (6) inches of concrete; and no stone shall be closer than one (1) foot to any top surface nor closer than six (6) inches to any coping. For walls or piers greater than four (4) feet in thickness, derrick stone may be used; each stone shall be·surrounded by at least one (1) foot of concrete; and no stone shall be closer than two (2) feet to any top surface nor closer than eight (8) inches to any coping. No stone shall be embedded directly under, over or around a sewer.

3.6.13 Removal of Forms and Falsework: Portions of structure amply supported to carry construction loads may have vertical sides of forms removed, twenty-four (24) hours after concrete is placed, provided the Engineer’s approval is obtained. Removal shall be expedited to allow for finishing operations.

Where the beam, slab, arch, column, or other member carries construction loads, the forms shall not be removed until 14 days have elapsed after the placing of concrete; and in such case, re-shoring will be required until the concrete has attained its required 28-day strength.

Methods of form removal 1ikely to cause overstressing of the fresh concrete shall not be used. In general, the forms shall be removed from the bottom upwards. Column forms shall be removed before the falsework is removed from beams and girders. Forms and their supports shall not be removed without the approval of the Engineer.

In general, arch centering shall be struck and the arch made self- supporting before the railing or coping is placed. This precaution is essential in order to avoid jamming of the expansion joints and variations in alignment. For filled spandrel arches, such portions of the spandrel walls shall be left for construction subsequent to the striking of centers, as may be necessary to avoid jamming of the expansion joints. Centers shall be gradually and uniformly lowered in such a manner as to avoid excessive stresses in any part of the structure. In arch structures of two or more spans, the sequence of striking centers shall be as specified or approved by the Engineer. In cold or freezing weather, all forms shall remain in place for the duration of the curing period.

When cylinder tests are used to control the removal of forms, the value for strength shall be fixed by the Engineer.

The beam and cylinder test specimens shall be cured under the same condition that is encountered by the portions of the work they represent

3.6.14 Curing Concrete:

3.6.14.1 All concrete surfaces shall be protected by covering as soon as possible with canvas, straw, burlap, sand, or other satisfactory material and kept moist; or if the surfaces are not covered; they shall be kept moist by flushing or sprinkling. Curing shall continue for a period of not less than 5 days after concrete has been placed. Liquid curing compounds may be used as approved and directed.

3.6.14.2 No flushing will be permitted until 12 hours after placing concrete.

3.6.14.3 Forms shall be sprinkled once each day before their removal. After removal of forms, the concrete shall be thoroughly wetted at least 3 times a day until the end of the curing period.

3.6.14.4 Retaining walls shall be water cured not less than 14 days.

3.6.14.5 The concrete shall be kept at a temperature not less than 60 degrees F., for the full curing period.

3.6.14.6 When moderate to low-heat cement (Type 11-ASTM Designati on C-150)isused, the curing time herein specified shall be increased 25 percent.

3.6.14.7 When high early Portland cement (Type 111-AST Designation C-150) is used, the curing period used shall be not less than 40 percent of that specified for normal Portland cement.

3.6.15 Fixed and Expansion Joints:

3.6.15.1 All joints shall be constructed according to details shown on the plans, subject to the following:

3.6.15.2 Open Joints: Shall be placed in the location shown on the plans and shall be constructed by the insertion and subsequent removal of a wood strip, metal plate or other approved material. The insertion and removal of the template shall be accomplished without chipping or breaking the corners of the concrete. Reinforcement shall not extend across an open joint unless so specified on the plans.

3.6.15.3 Filled Joints: Poured expansion joints shall be constructed similar to open joints. When premolded types are specified, the filler shall be placed in correct position as the concrete on one side of the joint is placed. After form is removed, the concrete on the other side shall be placed.

3.6.15.4 Steel Expansion Joints: The plates, angles or other structural shapes shall be accurately shaped, at the shop, to conform to the section of the concrete floor. Caro shall be taken to insure that the surface in the finished plane is true and free of warping. Positive methods shall be employed in placing the Joints to keep them in correct position during the placing of the concrete. The size of opening at expansion. Joints shall be as designated on the plans at given temperature. The size of opening at time of pouring concrete shall be adjusted in accordance with existing temperature.

3.6.15.5 Water stops: Metal water stops shall be furnished and placed as provided on the plans. They shall be spliced, welded, or soldered to form continuous watertight joints.

3.6.16 Preparation of Bearing Areas: Where steel structures rest directly on the concrete masonry, all bearing areas shall be finished true to given elevations on the plans and shall not be deformed or irregular. Bearing plates shall be set level in exact position and shall have even and full bearing upon the masonry. Unless otherwise directed by the engineer, they shall be placed on a layer of canvas and red lead, sheet lead or preformed fabric pads as specified.

3.6.17 -Loads on Newly Finished Structure: The full load on the newly finished structure shall not be placed thereon until the concrete has attained its designed strength, which in all cases shall be certified by the Engineer.

3.6.18 Finish of Concrete Surfaces:

3.6.18.1 General: Finishing operations shall be started as soon as practicable after removal of forms:

3.6.18.2 Surface finishes shall be classified as follows:

Class 1 - Ordinary surface finish
Class 2 - Rubbed finish
Class 3 - Tooled finish
Class 4 - Sand-blast finish
Class 5 - Wire brush or scrubbed finish
Class 6 - Floated surface finish
Class 7 - Sidewalk finish
Class 8 - Vacuum finish

3.6.18.3 All concrete shall be given Class 1 - Ordinary Surface Finish, and in addition, if further finishing is required, such other types of finish as is specified. If not otherwise specified, the following surfaces shall be given a Class 2 - Rubbed Finish: Exposed faces of piers, abutments, wing walls and retaining walls, outside faces of beams, girders, columns, brackets, curbs, headwalIs, railings, arch rings, spandrel walls and parapets. Interior unexposed beams and girders, backwalls above bridge seats or the underside of copings, shall not be finished.

3.6.18.4 The surface finish on piers and abutments shall include all exposed surfaces below bridge seat to one (1) foot below low water elevation or two (2) feet below finished ground line when such ground line is above the water surface.

Wingwalls shall be finished from the top down to two (2) feet below the finish slope lines on the outside face, and for a depth of one (1) foot below the top on rear face. Tops of copings and bridge seats between bearings shall be sloped to drain. Mortar finish will not be permitted. Roadway floors shall be given Class 6 - Floated Surface Finish, unless otherwise specified.

3.6.18.5 Class I - Ordinary Surface Finish: Immediately following the removal of forms, all fins and irregular projections shall be removed from all surfaces except from those which will not be exposed or waterproofed. On all surfaces, the cavities produced by form ties and all other holes, honeycomb spots, broken corners or edges and other defects shall be thoroughly cleaned, and after having been kept saturated with water for a period of not less than three hours, shall be carefully pointed with a mortar of cement and fine aggregate mixed in the proportions used in the grade of the concrete being finished. Mortar used in pointing shall not be more than one hour old. The mortar patches shall be cured as specified under curing. All construction and expansion joints in the completed work shall be left carefully tooled and free of all mortar and concrete. The joint filler shall be left exposed for its full length with clean and true edges.

The resulting surfaces shall be true and uniform. All surfaces which cannot be repaired to the satisfaction of the Engineer shall be "rubbed" as specified for Class 2, Rubbed Finish.

3.6.18.6 Class 2 - Rubbed Finish: After removal of forms, the rubbing of concrete shall be started as soon as its condition will permit. Immediately before starting this work the concrete shall be kept thoroughly saturated with water for a minimum period of three (3) hours. Sufficient time shall have elapsed before the wetting down to allow the mortar used in the pointing of rod holes and defects to thoroughly set.

Surfaces to be finished shall be rubbed with a medium coarse carborundum stone, using a small amount of mortar on its face. The mortar shall be composed of cement and fine sand mixed in proportions used in the concrete being finished. Rubbing shall be continued until all form marks, projections and irregularities have been removed, all voids filled and a uniform surface has been obtained. The paste produced by this rubbing shall be left in place at this time.

After all concrete above the surface being treated has been cast, the final finish shall be obtained by rubbing with a fine carborundum stone and water. This rubbing shall be continued until the entire surface is of a smooth texture and uniform color.

After the final rubbing is completed and the surface has dried, it shall be rubbed with burlap to remove loose powder and shall be left free from all unsound patches, paste, powder and objectionable marks.

3.6.18.7 Class 3- Tooled Finish: Finish of this type for panels and similar work may be obtained by the use of a bushhammer, pick, crandall, or other approved tool. Air tools, preferably, shall be employed. No tooling shall be done until the concrete has set for at least 14 days and as much longer as may be necessary to prevent the aggregate particles from being picked out of the surface. Tooling shall be kept back one inch from all edges. The finished surface shall show a grouping of broken aggregate particles in a matrix of mortar, each aggregate particle being in slight relief.

3.6.18.8 Class 4- Sand Blasted Finish: The thoroughly cured concrete surface shall be sand blasted with hard, sharp sand to produce an even fine-grained surface in which the mortar has been cut away, leaving the aggregate ex- posed.

3.6.18.9 Class 5 - Wire Brushed or Scrubbed Finish: This type shall be produced by scrubbing the surface of green concrete with stiff wire or fiber brushes, using a solution of muriatic acid in the proportion of one (1) part acid to four (4) parts water. As soon as the forms are removed and while the concrete is yet comparatively green, the surface shall be thoroughly and evenly scrubbed as above described until the cement film on surface is completely removed and the aggregate particles are exposed. Scrubbing should leave an even-pebbled texture

and an appearance grading from that of fine granite to coarse conglomerate, depending upon the size and grading of aggregate used. As soon as the scrubbing has progressed sufficiently to produce the texture desired, the entire surface shall be thoroughly washed with a dilute solution of ammonia and water.

3.6.18.10 Class 6 - Float Finish: After the concrete is compacted as specified, the surface shall be carefully rodded and struck off with a strike board to conform to the cross-section and grade shown on the plans. Proper allowance shall be made for camber, if required. The strike board may be operated longitudinally or transversely and shall be moved forward with a combined longitudinal and transverse motion, the manipulation being such that neither end is raised from the side forms during the process. A slight excess of concrete shall be kept in front of the cutting edge at all times.

After striking off, the surface shall be made uniform by longitudinal or transverse floating, or both. Longitudinal floating will be required except in places where this method is not feasible.

The longitudinal float, operated from foot bridges, shall be worked with a sawing motion while held in a floating position parallel to the pavement centerline and passing gradually from one side of the pavement to the other. The float shall then be moved forward one-half of its length and the above operation repeated. Machine floating which produces equivalent results may be substituted for the above hand method.

The transverse fat shall be operated across the pavement by starting at the edge and slowly moving to the center and back again to the edge. The float shall then be moved forward one-half of its length and the above operations repeated. Care shall be taken to preserve the crown and cross section of the pavement.

After the longitudinal floating has been completed and the excess water removed, but while the concrete is still plastic, the slab surface shall be tested for trueness with a straightedge. For this purpose the Contractor shall furnish and use an accurate ten (10) foot straightedge swung from handles three (3) feet longer than one-half (1/2) the width of the slab.

The straightedge shall be held in successive positions parallel to the pavement center line and contact with the surface and the whole area gone over from one side of the slab to the other as necessary. Advance along the deck shall be in successive stages of not more than one-half (1\2) the length of the straightedge. Any depression found shall be immediately filled with freshly mixed concrete, struck off, consolidated and refinished. High areas shall be cut down and refinished. The straightedge testing and re-floating shall continue until the entire

surface is found to be free from departures of one-eighth (1/8) inch from the ten (10) foot straightedge and that the slab has the required grade and contour.

When the concrete has hardened sufficiently, the surface shall be given a broom finish. The broom shall be of an approved type. The strokes shall be square across the stab from edge to edge, with adjacent strokes slightly overlapped, and shall be made by drawing the broom in a manner that will produce regular corrugations not over one-eighth (1/8) inch in depth. The surface as thus finished shall be free from porous spots, irregularities, depressions, and small pockets or rough spots.

3.6.18.11 Class 7 - Sidewalk Finish: After the concrete has been deposited in place, it shall be compacted by ramming and spading and the surface shall be struck off by means of a strike board and floated with a wooden or cork float. An edging tool shall be used on all edges and at all expansion joints. The surface shall not vary more than one-eighth (1/8) inch under a ten (10) foot straightedge, and shall have a granular or matted texture when finished.

Sidewalk surfaces shall be laid out in blocks with an approved grooving tool as shown on the plans or as directed by the Engineer.

3.6.18.12 Class 8 - Vacuum Finish Approved vacuum processing mats and approved pump and equipment of capacity adequate to maintain a vacuum of at least 20 inches of mercury at the mats, shall be used.

After concrete has been placed between construction joints, vibrated and screeded to specified elevation, the vacuum mats shall be applied to the concrete surface in approved sequence. Water extraction shall begin Immediately and continue until at least 0.10 gallons of water per square foot of area has been extracted from the mix, but no longer than 30 minutes. After the mats are removed, the surface shall be floated (power floated if required) and steel trowel led to a smooth finish.

The Contractor shall provide equipment to determine the amount of water *ex*tracted from the concrete, such amount being witnessed and certified by authorized representative of the Department of Streets.

3.6.19 Pneumatically Applied Mortar

3.6.19.1 General Description - Pneumatically applied mortar shall consist of a mixture of Portland cement, sand and water.

3.6.19.2 The material shall be mixed dry and be deposited in the hopper of the gun. after sealing the hopper, pneumatic pressure shall be applied to convey the material through the hose to the nozzle. Water under a pressure greater than that

on the materials applied at the nozzle where it comes in contact with the dry mix. The velocity of the mix and water shall be controllable at the nozzle, it shall be applied by competent operators. Application of mortar having a temperature below 50 degrees F, shall be subject to approval of the Engineer.

3.6.19.3 Materials and Pressures - Portland cement, sand and water shall conform to the specifications herein stated for concrete masonry.

Sand shall be well graded to pass a 3/8" screen and shall be free from lumps that will not pass a 3/8" screen.

The air pressure at the machine end of the transporting hose shall be not less than 35 pounds per square inch for hose lengths of 50 feet or less and shall be increased proportionally up to 55 pounds per square inch for a hose length of 250 feet.

The water pressure at the machine end of the transporting hose shall be at least 15 pounds per square inch greater than the air pressure at the machine end.

3.6.19.4 Proportions - The proportion of cement to sand shall be based on dry and loose volumes and shall not be less than one to four (1:4) for encasement of steel members, one to three (1:3) for concrete repair, and one to four and a half (1:4 ½) for special linings.

3.6.19.5 Water Content - The water content shall be maintained at a practicable minimum and not in excess of 3 gallons per bag of cement, including the surface water on the sand.

3.6.19.6 Mixing - The cement and sand shall be thoroughly mixed before being charged into the machine. The sand shall contain not less than three (3) nor more than six (6) percent moisture by weight.

3.6.19.7 Nozzle Velocity - The velocity of the material as it leaves the nozzle must be maintained uniformly at a rate determined for the given job conditions to produce minimum rebound.

3.6.19.8 Nozzle Position The nozzle shall be held in such a position and at such di stance that the stream of flowing material will impinge at approximately right angles to the surface being covered, without excessive impact.

3.6.19.9 Rebound Sand - Rebound or accumulated loose sand shall be removed from the surface to be covered prior to placing of the original or succeeding layers of mortar.

3.6.19.10 Forms - The forms shall be structurally sufficient and of such design that rebound or accumulated sand can freely escape or be readily removed. Shooting strips should be used at corners, edges, and on surfaces where necessary to obtain true lines and proper thickness.

3.6.19.11 Joints - The pneumatically applied mortar at the end of any day's work or similar stopping periods shall be sloped off to a thin edge. Before placing an adjacent section, this sloped portion shall be thoroughly cleaned and wetted.

3.6.19.12 Bond - Surfaces to which pneumatically applied mortar is to be bonded shall be thoroughly cleaned of dirt, paint, grease, organic matter and loose particles. Absorptive surfaces shall be wetted before the application of the mortar.

No mortar shall be applied before the existing concrete surface shall be thoroughly cleaned by sand-blasting and all rust or scale has been removed from steel or reinforcing.

3.6.19.13 Curing - Pneumatically applied mortar shall be so applied, protected, and cured as to prevent its temperature from falling below 50 degrees F. or a lack of moisture for the periods Indicated below:

1. Where normal Portland Cement is used, seven (7) days.
2. Where high-early strength Portland cement is used, four (4) days.

3.6.19.14 Reinforcement - The reinforcement shall be galvanized steel wire fabric No. 12 wire gage having from 2" x 2" to 4" x 4" openings or *may* be galvanized expanded metal having openings similar to wire fabric. The reinforcing steel area shall be equal to 0.2 percent of the cross-sectional area of the mortar. The reinforcing shall be placed at a minimum of 1/2" from Inner surface and 3/4" from outer surface of mortar. Reinforcing shall be securely fastened with expansion bolts spaced 18 to 24 inches in each direction, at the discretion of the Engineer. Fabric shall be lapped one mesh and tied.

3.6.20 Measurement and Payment for Concrete Work

3.6.20.1 Where unit price bids are taken, the payment for concrete of the various classes shall include compensation for all items of expense required to complete the concrete work, shown on the plans, with the exception of reinforcing steel. The payment for concrete shall include the cost of joint fillers, bearing pads, anchor bolts, stone drains, weeper pipes, sleeves, metal drains, expansion Joints and miscellaneous metal devices unless they are covered by other items in the contract. The quantity of concrete involved in fillers, scorings and chamfers one

(I) square inch or less *in* cross-sectional area shall be neglected. Payment will be made on the basis of the actual yardage within the neat lines of the structure as shown on the plans or revised by authority of the Engineer, except that deduction shall be made as follows:

The volume of structural steel, including steel piling, encased in concrete.
The volume of timber plies encased in concrete, assuming the volume to be 0.8 cubic foot per linear foot of pile.
The volume of concrete piles encased in concrete.

3.6.20.2 No deduction shall be made for the volume of concrete displaced by steel reinforcement, floor drains, or expansion joint materiaI. If a bid is asked on railings, that portion of the railing above the top of the roadway curb or above the surface of the sidewalk or parapet, as the case may be, shall not be included in the yardage of concrete, but shall be paid for as railing. Massive pylons or posts which are to be excepted from railing payment shall be so noted on the plans.

3.6.20.3 Payment for pneumatically applied mortar will be made on the basis of the actual number of square feet placed and accepted as per unit price bid, which shall include compensation for all items necessary to complete the work and shall include metal reinforcement unless otherwise provided.

3.6.20.4 In addition to above, see City Standard Contract Requirements, Section 37, "Scope of Payments".

3.6.21 Reinforcing Steel

3.6.21.1 General: Unless otherwise shown on plans or covered in the contract specifications, the general procedure for the production of reinforcing bars at the mill, the shop fabrication, manner of shipment to the job and placement in the structure, shall be governed by the "Code of Standard Practice" of the Concrete Reinforcing Steel Institute, hereinafter called "Code", and the American Concrete Institute “Manual of Standard Practice" for Detailing Reinforced Concrete Structures, hereinafter called "A.C.I. Manual". Proper facilities shall be provided at all times for the Engineer or his duly authorized representative, for inspection and testing of bars, at the mill, fabrication shop and in the field. These tests shall be at the sole expense of the Contractor.

Approval of material or shop fabrication by the Engineer or the Inspector, will not relieve the Contractor of the responsibility for failure to meet the proper requirement in quality of the material and the workmanship.

The Contractor shall furnish the Engineer with shipping lists. When directed by the Engineer, the weights of reinforcing bars delivered to the job shall be checked on a certified scale.

3.6.21.2 Reinforcing Material: All reinforcing steel shall conform to the current specifications of ASTM A-432 or A-431 as specified, with deformations in accordance with ASTM A-305. When there is no positive identification mark with respect to strength rolled into the bar itself, a certified mill test report shall be furnished for each bundle of reinforcing bars.

Welded wire fabric and cold drawn steel wire reinforcement shall conform to the requirements of the current specifications for Cold Drawn Steel Wire for Concrete Reinforcement, ASTM. Designation A-185.

Bars shall be unpainted and free from rust scales, grease, dirt or any foreign matter and shall have no kinks or bends other than those required. The Inspector shall reject all bars that do not meet the above requirements.

3.6.21.3 Shop Detail Drawings - Shop detail drawings shall be made in accordance with the"A.C.1. Manual". For requirements as to submission of shop detail drawings, see Standard Contract Requirements (Clause 3h), "Shop Drawings”.

3.6.21.4 Fabrication - Fabrication of bars shall not be begun until the shop details have been approved. The Engineer shall be notified of the shop's intention to start fabrication. No shipment of fabricated material shall be made until the Engineer or the Inspector has had ample time to make Inspection. Bars shall be cold bent to the shapes shown on approved shop detail drawings.

3.6.21.5 Placing Reinforcing Steel - Reinforcing steel shall be placed in accordance with the “Code”and the following requirements:

Placing and Fastening - Reinforcing Steel shall not be placed in the forms until all loose rust scale, grease; clay or other coatings of foreign substances have been removed from the bars. Bars showing injury due to straightening or bending shall be rejected by the Engineer. Bars spaced less than twelve (12) inches center to center shall be tied at alternate intersections; where spacing is twelve (12) inches or greater, they shall be tied at every intersection.

The space between side of bar and inside face of forms and spaces between bars shall be maintained by means of accessories as shown in the "Code" and "A.C.I. Manual ". Metal chairs in contact with exterior face of the concrete shall be galvanized.

Bar Spacing - The minimum distance center to center of stressed bars shall be two and one-half (2 1/2) times the diameter of round bars. In no case shall the clear distance between bars be less than one and one-third (1 - 1/3) times the size of the coarse aggregate. Fabric reinforcement shall be flattened prior to placing in forms.

3.6.21.6 Splicing - Bars shall be continuous between points of splicing shown on the plans. Splices at points not shown on plans will not be permitted unless approved by the Engineer. The length of splices will be shown on the plans. Splices shall be staggered. Field welding may be allowed if noted on the plans, or at the discretion of the Engineer, with authorization in writing.

3.6.21.7 Laps - Bars shall have a lap of twenty-four (24) diameters, unless otherwise shown or noted. Bars near the tops of beams and girders having more than 12 inches of concrete under the bars shall be lapped 35 diameters to make the splice, mesh or bar mat reinforcing shall be lapped a sufficient length to develop the stress. At edges, the lap shall not be less than one mesh in width.

3.6.21.8 Special Anchorage - The special anchorage of the main reinforcing steel shall be as shown on plans or as specified elsewhere, except that the ends of top bars over continuous supports shall be straight and extend into adjacent span a sufficient length to take care of design requirements.

3.6.21.9 Cover or Embedment of Bars - The cover or protection of the reinforcing steel for the various portions of the work shall be in accordance with the "Code", unless otherwise shown on the plans.

3.6.21.10 Substitutions - Whenever the Contractor proposes to use different size bars than called for on the approved plans, he shall first obtain the Engineer's approval in writing, before incorporating the steel in the work.

3.6.21.11 Measurement and Payment - Payment for steel reinforcement incorporated in the concrete masonry will be based upon the total computed theoretical weight.

Where mesh and bar mat reinforcing weight per square foot is given on the plans, it shall be used in computing the total weight.

No allowance will be made for accessories used in fastening the reinforcing in place. Where the Contractor requests that a substitution in the reinforcing steel be made, he shall not be paid for any additional weight over that of the originally designed steel. Where substitution is requested by the Engineer, the weight resulting from such request shall be paid for by the City.

Material in laps of splices authorized by the Engineer for convenience of the Contractor shall not be included for payment.

Payment for reinforcement shown on the approved bar detail drawings, except as noted below, shall be made at the contract price per pound. Payment shall include the cost of furnishing, fabricating and placing of the reinforcement, and will only include that reinforcing steel that is in place in the completed project regardless of what is shown or noted on the plans or specifications.

3.6.22 Pre-cast and Pre-stressed Concrete Bridge Members.

3.6.22.1 General - The work consists of the manufacture and incorporation In the work of pre-cast and pre-stressed concrete members, in accordance with the plans and specifications. All applicable portions of these standard specifications shall be used with this section.

3.6.22.2 Inspection - All equipment, processes, materials, tests and the finished product at the manufacturing plant and at the job site, including handling, storage and transportation, shall be subject to inspection and approval of the engineer.

3.6.22.3 Shop Drawings - shall be submitted for approval for all reinforcement in the prestressed concrete units. A minimum of four prints of the approved shop drawings shall be furnished to the City. At the conclusion of the contract, tracings on cloth of the approved shop drawings shall be given to the City. The contractor shall not proceed with the manufacture of the beams until the final shop drawings have been approved.

3.6.22.4 Tests - will be made of the proposed concrete design mixtures,
The Contractor shall furnish sufficient quantities of material s to the City Testing Laboratory in ample time to permit 28 day cylinder tests before starting concrete work on the prestressed units.

During the course of manufacture, four or more standard 6 inch diameter x 12 inch high concrete test cylinders will be cast for each prestressed unit.

The Contractor shall supply the facilities, labor and materials for casting the concrete in the test cylinder molds, at his own expense, and shall be responsible for initial curing of the cylinders and for transportation to the City Testing Laboratory without additional payment, Loadtests are not a criteria for acceptance of pre-stressed bridge members and the engineer will make the final decision for matters in dispute. *Any* defective construction which in the opinion of the Engineer *may* adversely affect the strength of a beam or its performance in the bridge superstructure, shall be cause for rejection. Rejected beams shall be replaced *by* the Contractor at no expense to the City.

3.6.22.5 Load-Strain Curve - The manufacturer shall submit a guaranteed typical load-strain curve of the tensioning strand or high strength steel bar which is the

average of at least ten tests on the same type and size, produced *by* the same manufacturing procedure. Two (2) copies of the certified load elongation curve shall be sent with each shipment *of* material, and one *copy* shall be made available to the engineer.

3.6.22.6 Plant Requirements -

Details of the plant facilities, materials and methods shall be submitted to the Engineer at least two weeks before the date of manufacture of the units. All plants manufacturing prestressed concrete members shall be inspected and approved *by* the Engineer before manufacture of beams can be started. This requirement may be waived when the plant has been pre-qualified for similar work

The plant shall be maintained in a safe manner, be clean and well drained. Storage areas shall be adequate in size, with stabilized surfaces.

The plant shall have approved testing equipment for moisture control, gradation of aggregates, specific gravity, slump and concrete *cyl*inder compression tests, and control of air in the concrete.

Concrete Mixing Equipment may be an approved drum type stationary mixer, pan type mixer, or horizontal blade mixer. The name plate shall show the capacity and speed. Locking devices shall be provided to prevent discharge prior to the specified mixing time and to prevent materials being placed in the mixer before the discharge gates are closed. A regulator shall maintain the designed mixing speed. A signal device shall function when water is added. An adjustable automatic device shall be used to control the amount of water. Water gages and dials shall be kept properly calibrated. The loading hopper of the mixer shall be shaped so that all materials can be easily discharged. Mixer blades which are worn down ¾ inch or more shall be replaced. The mixer shall be kept clean and free from hardened concrete. Heating equipment shall be adequate to provide the specified temperatures in the aggregates, water and the concrete mixture. The mixing equipment shall be enclosed.

- Casting Beds may be constructed of steel or concrete. The tops of the beds shall be higher than the floor grade. The beds, abutments, and appurtenances shall be capable of resisting all forces applied to them without appreciable movement.

Hydraulic Jacks of sufficient size shall be used for tensioning. They shall be equipped with automatic cut-off valves and gages, and with a minimum diameter of 6 inches, and 200 pound increments. Gages shall be calibrated with jacks with which they will be used, and the calibration report furnished to the Inspector. Two calibrated gages shall be provided for jacks, one for prestressing, the other for the inspector to verify the working gage. Calibration of jacks shall be within six months of the date when work will start.

Hydraulic Pumps shall be of sufficient capacity to accomplish the stressing operation in a reasonable length of time. They shall be located as near as practicable to the jacks which they serve. Piping shall be double extra strength. Flexible hose and tubing shall be extra strength.

The Jacking System shall be designed to insure uniform stress in all strands. When multiple strands are tensioned simultaneously, dynamometers shall be used to equalize the initial stress on all strands prior to application of the full tensioning load with the master jack. Jacks shall be equipped with gages which will indicate the pressure in the jack within 2 percent. Gages shall be adjusted and certified. At intervals, during prestressing, the gages will be calibrated and checked for accuracy, as ordered by the Engineer.

Batching Equipment shall have a minimum of 3 storage bins and a weighing hopper. The bins shall have a minimum capacity for not less than one days production. Bins shall be constructed so as to prevent segregation and build up of materials. Bins shall be heated as necessary. They shall be covered. Partitions shall be high enough to prevent spillage from one compartment to another. Gates shall be cut off easily, quickly and completely. Bins shall be charged by material falling directly over the center of each compartment, and shall be kept as full as possible at all times. A platform shall extend around the weighing hopper to facilitate inspection and operation.

Scales for Weighing aggregates and cement shall be either of the beam or springless dial type, of a standard make and design and sensitive to one percent of the maximum load that may be required. When a beam scale is used, it shall be equipped with a tare beam for balancing the hopper, and a tell-tale device to indicate at least the last 200 pounds of load. Adequate standard test weights shall be available for checking the accuracy. All exposed fulcrums, clevises and similar working parts shall be kept clean. All weighing and indicating devices shall be in full view of the operator while charging the hopper, and he shall have convenient access to all controls.

Water Tank: Measurement shall be by volume or weight in accordance with ASTM.C-94. Measuring tanks shall be equipped with outside taps and valves to check the calibration.

Dispensing Units for Additives: Powdered additives shall be measured by weight. Paste and liquid additives shall be measured by weight or volume. Mechanical dispensing units shall be used. Additives shall be measured within a limit of accuracy of 3 percent.

3.6.22.7 Materials:

Materials for concrete mixtures shall be as described below and as in 3.6.8,

herein. The materials as approved for the source, type, brand and other characteristics shall be used throughout. Steel for pre-stressing may be strands, bars, wires or cable.

Pre-tensioning Strands: Shall be uncoated, stress-relieved 7 wire strands conforming to ASTM (A-416) and the following requirements:

Nominal Diameter	3/8" or 7/16"
Number of wires per strand	7
Nominal steel area	.0799 sq. in. (3/8"); 0.109 sq. in. (7/16")
Minimum yield strength	(7/16") pounds per strand
as determined by 0.2 percent	
off-set method	
Elongation at rupture	3 percent in 10 inches (Min.)

The diameter of the central wire in the strand shall be 4/1000 larger than the diameter of the six exterior wires. Strands shall be time-temperature treated after stranding. Strands shall be free from of oil or lubricants

Stress-Relieved Wire: Shall conform to ASTM (A-421).

Accessories: Shall be suitable for the particular prestressing system, as approved by the Engineer. Strands, wires and cables shall not be spliced within the member unless authorized in writing by the Engineer.

Concrete: Shall be of the classes specified for the work. The Contractor shall design and submit for the Engineer's approval, concrete mixes which shall attain minimum design strength, as shown on the contract plans, in 28 days when sampled and tested in accordance with the current specifications of ASTM. The concrete mixture shall be proportioned within the limits shown herein. Calcium chloride or any admixture containing calcium chloride, shall not be used in the mixture.

3.6.22.8 Forms for Precast Units - All forms shall be made and maintained true to the shapes and dimensions shown on the plans.

Bottom forms shall be maintained in true alignment and of sufficient stiffness to prevent deflection under load of wet concrete. The surface shall be smooth and with joints, if any, treated so that no joint marks are evident on the finished member

Side forms shall be supported without resort to ties or spreaders within the body of the member. They shall be braced and stiffened so that no undesirable deflection or curvature takes place under concrete pressure. They shall be designed that proper cleaning of the forms between uses is facilitated.

The form faces in contact with the concrete shall be thoroughly cleaned after each casting operation and coated with form lacquer or oil before concrete is placed. The form lacquer or oil shall be of such quality as to leave no stains or discoloration on the faces of the precast members. Care shall be taken to prevent the form coating from coming into contact with the reinforcement.

Before any forms are removed, the concrete shall have attained sufficient strength to prevent injury due to such removal. No forms shall be removed without the approval of the Engineer. Proper care and precaution shall be exercised in removing forms so that no damage be done to the finished surfaces.

After forms are stripped, any air holes present on the formed surfaces shall be filled with mortar of a corresponding mix.

Forms for the voids in the beams shall be subject to approval by the Engineer. These forms shall be left in place.

Forms shall be designed to provide for openings for transverse tying of beams as shown on the contract drawings.

Sleeves, inserts and other embedded fixtures shall be accurately placed and maintained in correct position during manufacture.

3.6.22.9 Placing of Pretensioning Strands and Application of Prestress - Prior to stressing operations, the Contractor Shall submit to the Engineer, for approval , detailed information concerning the proposed method of application of prestreesing force, including type and capacity of jacks and gauges; computations of pressures and elongations, etc.

The pretensioning strands shall be placed in proper position as shown on the plans and stretched individually, or in groups, to the required tension. If the wires or strands are tensioned in groups, a uniform Initial stress and length between end anchorages shall be established before final tensioning is started. No wires with kinks, bends, nicks, or other defects will be permitted. All strands shall be in position before stressing operation is begun. The normal reinforcing shall be placed in position after stressing is performed. All reinforcement shall be free of rust, corrosion or foreign matter.

Stressing of the strands shall be performed by application of tension to the strands to produce a prestressing force equally applied to each of the strands with an applied stress of 175,000 p.s.i. This stressing will take place before *any* concrete is poured.

The tension of strands stressed individually shall be measured by elongation and by accurately calibrated hydraulic gauges. When two or more strands are stressed by jacks, the required stress shall be measured by the jacking system and checked by the elongations.

During stressing, records shall be made of elongations and pressure readings, and these records presented to the Engineer.

When draped strands are used, the loss of stress due to friction shall not exceed 5 percent. Hold down points shall be placed accurately. The draped strand method shall be used only by plants approved for this method.

The tension in the strands shall not be transferred to the concrete in the member until the concrete has attained the strength prescribed. Concrete cylinder tests at the manufacturer' s laboratory will determine the time for de-tensioning. The average strength of at least two cylinder breaks will govern.

3.6.22.10 Placing Concrete in Precast Units - Concrete shall be deposited only in the presence of the Engineer and by methods approved by him.

No free water shall be permitted with in the forms when concrete is being placed.

Concrete shall be thoroughly compacted by means of internal and/or external mechanical vibrators. The type, number and method of application shall be approved by the Engineer. Internal vibration shall be applied to the concrete for time Intervals approximating ten seconds and at points not more than thirty inches apart. Vibrators shall not be used to move concrete horizontally in the form.

Placement and vibration of concrete will be done in such a manner as not to move the prestressing strands from their position as shown on the contract drawings.

Unless otherwise specified, the surface finishing of the prestressed fascia beams shall conform to the requirements of Class I Concrete, to provide an exposed surface true and equal in appearance, texture and regularity to corresponding cast in place concrete areas. The top of all composite design beams shall be struck off and scored as directed by the Engineer.

Concrete curbs shall be poured separately, at the construction site.

3.6.22.11 Curing of Precast Units - All members shall be protected against loss of moisture after casting by any of the following methods:

By covering with a double layer of 12 ounce burlap as soon as possible after concrete is pieced, and keeping the burlap wet continuously for a period of seven days for normal concrete mixtures or for three days for high early strength mixtures, with the air temperature maintained between 50 and 70 degrees F.

For steam curing, the concrete shall be covered with burlap as above and an approved enclosure placed over and around the casting bed. When the concrete has hardened, saturated steam shall be circulated within the enclosure so that a uniform temperature may be maintained at the precast member, within the limits of 100 to 160 degrees F., until the required strength is attained, but in no case less than 36 hours. The covering material shall be kept saturated for the full curing period.

Proper controls and regulators shall be provided to secure uniform temperatures throughout, Steam should not impinge directly on the forms or concrete. Temperatures should be increased and decreased slowly, approximately 30 degrees F., per hour.

For hot water curing, the concrete shall be covered as above and the enclosure placed. The covering material must be kept saturated. The hot water *may* be jetted on the forms and the covering; or the hot water or other approved source of heat may be used with the normal source of water used to spray the precast member. The temperature at the member shall be maintained uniformly throughout its length between the limits of 100 and 160 degrees F., for not less than 36 hours and until the required strength is attained. Temperatures shall be increased and decreased slowly. The surface of the concrete shall be hard before the temperature is increased.

By other methods submitted by the Contractor and approved by the Engineer.

After curing, care shall be taken to prevent the concrete from drying out until the required 28-day strength has been reached. The concrete shall not be exposed to freezing temperatures during the same period.

3.6.22.12 Storage and Transportation of Precast Units - Prestressed members shall not be shipped until the full design strength has been reached. For storage and transportation, the members shall be stacked and supported at the points of the reactions in the structure, and at intermediate points as required. Approved lifting devices shall be placed at locations shown on the plans. The members shall be handled in an upright position at all times,

3.6.22.13 Placing of Precast Units - The precast members shall be placed in the sequence shown on the plans. The tops of the members shall be marked similarly to the markings on the placement plans. Tie rods shall be threaded through the openings provided, and tightened. Holes for dowels shall be drilled into the tops of abutments and piers through the openings at the ends of the members, as shown. Dowels shall be inserted and the remainder of the hole packed with an approved cement grout, rubberized asphalt or other approved material as noted on the plans. On multiple spans, a one inch thick sheet of premolded cork joint material shall be placed between spans and at back walls or other joint filler material may be used as shown on the plans.

3.6.22.14 Construction of Shear Key Joints Between Adjacent Box Beams - The longitudinal joints between adjacent box beams shall be filled with non-shrinking grout containing an approved admixture for non-shrinking grout.

Immediately prior to filling the joints, the key ways shall be thoroughly cleaned of all debris; and all oil or grease or any other material which may prevent effective bonding, shall be removed from the surface to be bonded. After cleaning, the key

ways shall be thoroughly soaked, then tightly caulked below the bottom of the shear key with oakum or an approved equal, as indicated on the drawing, to avoid mortar leaks. This work shall be done carefully and the caulking material shall not project more than ½" into the shear key area. In cold weather the concrete against which the grout will be placed must be in a frostfree condition.

The non-shrinking grout shall be composed of 1 part of the approved admixture for non-shrinking grout, 2 parts of normal Portland cement and 3 parts of fine aggregate. It shall be of the non-shrinking type, shall be of flowable consistency, and shall have a minimum guaranteed compressive strength of 2000 p.s.i., in 24 hours when proportioned and mixed in accordance with manufacturer's recommendations. The grout after placement shall have an excess void filling action when subjected to moisture.

The non-shrinking grout shall be mixed in accordance with the manufacturers recommendations and the following:

The water requirements shall be based on the use of a saturated surface dry, fine aggregate.

The mixing shall be done as close to the point of use as possible.

All necessary equipment shall be present and in good working order prior to the start of mixing.

The dry materials shall be placed in the mixer and agitated to thoroughly mix the materials.

The water shall be added slowly, but the mixing time shall not exceed 3 minutes, unless otherwise permitted.

No mixing shall be started until all preparations have been made to use the grout.

All grout in any individual batch must be used within 20 minutes after completion of mixing.

The non-shrinking grout shall not be retempered.

The non-shrinking grout shall be placed directly Into the Joints. It shall be placed quickly and continuously and shall not be overworked.

Traffic or other loading shall not be permitted on the bridge for at least 24 hours after the grout has been pieced.

The recommendation of the manufacturer shall be followed when placing non-shrinking grout in either hot or cold weather.

The curing shall start immediately after the grout has been placed and shall be effected with the use of a double thickness of saturated burlap, The burlap shall be kept wet during the entire curing period which shall not be less than 24 hours. During cold weather, precautions must be taken to prevent freezing of the grout and to provide normal curing temperature of 70 degrees F. +/- 5.

3.6.23 Post-tensioned Pre-stressed Concrete

3.6.23.1 General - The work consists in the construction of reinforced concrete members which are provided with voids for the insertion of tensioning bars, strand, or wires. After placing and curing the concrete, the tendons are stressed in accordance with the manufacturer' s directions at a time after the concrete has reached the strength designed for tensioning.

The tensioning methods and materials may be those of any well established system, approved by the engineer, such as Lee-McCall, Wayss & Freytag, Freyssinet, Preload, etc. The contract specifications will indicate the system to be used. In the event that the system is optional with the Contractor, he shall submit detailed plans and specifications for approval.

3.6.23.2 Instruction - The Contractor shall certify to the Engineer that a technician, skilled in the prestressing method used, will be available at the site, to give to the Contractor all necessary instructions in the use of the prestressing equipment and installation of materials as may be required to obtain satisfactory results. This representative shall be available as long as required by the Engineer.

3.6.23.3 Shop Drawings shall be submitted for approval for all details of the prestressed concrete members. A minimum of four approved prints shall be furnished to the City. Upon completion of the contract, tracings of the shop drawings shall be given to the City.

3.6.23.4 Physical Properties of Tendons -

1. Wire or strand shall have a minimum tensile strength of 250,000 p.s.i. or as indicated on the design drawings or approved detail drawings. The minimum elongation shall be 4 percent in 10 inches at the ultimate strength of the wire and 4 percent in 24 inches at the ultimate strength of the strand. Wire and strand shall be stress relieved in accordance with current specifications of ASTM, The center wire of a strand shall be enough larger than the outside wires to guarantee that each of the outside wires will bear on the center wire.

2. High strength alloy steel bars (AI SI, Grade 5160, or equal) shall have the following physical properties:

Minimum ultimate stress	145,000 psi
Minimum stress – 0.2 percent offset from tangent	130,000 psi
Minimum elongation 20 diameters at ultimate stress	4 percent
Modulus of elasticity at the proportional limit	25,000,000 psi (min.)

During manufacture, each bar shall be proof-stressed to a minimum of 130,000 pounds per square inch.

3.6.23.5 Tests – For bars one static test shall be made from each mill heat to determine the physical properties of the steel, and the modulus of elasticity to be used in computing the prestressing force.

3.6.23.6 Certificates - shall be furnished by the manufacturers showing fatigue and creep characteristics of tensioning units.

- 3.6.23.7 Wedges - The wedge device shall have suitable physical properties to successfully develop the minimum ultimate stress specified for the bar.

A wedge anchor assembly with bar shall withstand 3,000,000 cycles of dynamic stress loadings in a stress range from 90,000 pounds per square inch to 95000 pounds per square inch without showing any signs of distress in any of the components.

The wedge assembly when subjected to a constant bar stress of 100,000 pounds per square inch shall have a wedge movement (with respect to the plate) no greater than 0.015 inch. This action shall cease and the assembly becomes stable in less than 24 hours.

3.6.23.8 End Anchorage Wedge Plates - End anchorage wedge plates shall be fabricated of hot rolled steel having physical characteristics not less than A I S I No. 1040. Anchorage back-up plates shall conform to ASTM Designation A7.

3.6.23.9 Couplers for Bars - The steel used in the manufacture of the couplers shall have suitable physical properties to pass successfully the static tensile tests, creep tests and fatigue tests specified herein for the bar and wedge assembly.

The couplers shall be of cylindrical shape with an outside diameter of twice the nominal diameter of the bar. The length of the coupler shall be not less than 4.15 nor more than 4.3 times the nominal bar diameter. Tolerances on outside dimensions of couplers shall not exceed plus or minus .010 inches.

Each bar and coupler shall be so threaded that when the thread on the coupler fully engages the thread on the bar, the assembled units will develop 100 percent of the specified minimum ultimate bar stress on the nominal bar area. The effective tensile cross-sectional area of the bar thread shall gradually increase to substantially the full diameter of the bar. Accordingly, the threads on the coupler shall be complementary to, and engageable with the progressively shallower terminal threads on the bar.

3.6.23.10 Enclosures for Bar Tendons - A grout-tight, galvanized, flexible metal sheath with an inside diameter ¼ inch greater than the prestressing tendon shall be used to form. the cavity for the tendon. The sheath shall be held firmly in place to avoid displacement during pouring and vibration of the concrete. A tolerance of plus or minus ¼ inch will be allowed in placing the prestressing steel. Method of securing sheaths in place - chairs, etc. shall be approved by the Engineer. Vent tubes and grout tubes placed as shown on the drawings shall be connected to the sheath to prevent intrusion of materials into the sheath while placing concrete.

3.6.23.11 Prestressing - End plates shall be placed perpendicular to the slope of the prestressing bar at the anchorage.

All prestressing steel shall be stressed by means of the hydraulic jacks conforming to the requirements set forth herein.

All jacks shall be equipped with accurate reading, calibrated, hydraulic-pressure gages to permit the stress in the prestressing steel to be computed at any time. A certified calibration curve shall accompany each jack. The prestress shall also be checked by elongation of the prestressing steel Care shall be taken to insure that the modulus of elasticity used to compute the prestress is the modulus reported for the mill heat of the steel being stressed.

Tensioning of the prestressing steel shall not commence until tests on concrete cylinders, manufactured and cured under the same conditions as the members to be prestressed, indicate the concrete of the members has attained a compressive strength of at least 4000 pounds per square inch.

For multiple span bridges, the first span to be tensioned shall be stressed from both ends. The second span shall be tensioned from only one end. Before proceeding with the next tensioning operation, the Engineer shall review the data and revise, where necessary, the prestressing force.

3.6.23.12 Placing - Any deviation from normal placing operations will be noted in the special specifications.

3.6.23.13 Grouting of Prestressing Units

All prestressing units shall be bonded. The prestressing units shall be detailed to provide grout and vent connections. The vendors of most tendons supply the grout and vent details.

The grout mixture shall consist of Portland Cement and water mixed to the consistency of a heavy paint. One pound of “Plastiment", as manufactured by the Sika Chemical Corporation, or approved equal, per sack of cement, shall be added to the grout. Other grout mixtures may be used with the approval of the Engineer.

Before grouting, the space around the prestressing steel shall be cleared of all debris and obstructions. This can be done by pumping water through the grout tubes following which the ducts shall be blown out with compressed air to remove all water, dirt, or other foreign substances. Grout shall then be injected under a moderate pressure until the sheath is filled with grout as evidenced by a steady stream of grout coming out of the vent tubes. The grout shall completely fill the enclosures. The grouting equipment shall be capable of grouting to a pressure of at least 100 pounds per square inch.

After the girders have been pressure grouted as specified herein, no superimposed load shall be applied to the bridge span until three (3) days have elapsed.

3.6.24 Pressure Grouting

3.6.24.1 General - The work consists of the internal consolidation of existing masonry structures and native rock by means of Portland cement grout Introduced under pressure.

3.6.24.2 Grout Holes and Check Holes shall be drilled into the masonry or rock to the diameters and depths shown on the plans. Cores shall be re-covered for all check holes.

The pattern of the holes may be varied at the direction of the Engineer to meet the requirements of obtaining complete consolidation.

Check holes may be drilled in any direction and at any length to determine the degree of consolidation. Cores removed from the check holes shall be marked by the Contractor and carefully preserved in wooden core boxes which shall be marked to show the locations of the holes. The boxes shall have division strips and marking blocks to indicate core recovery at not more than 5 feet intervals. Boxes shall be delivered to the designated storage place.

Holes shall have a minimum diameter of 1 ½ inches. They shall be drilled to such a depth and in such a manner as necessary to intercept Joints and internal voids. No horizontal holes which have been drilled completely through masonry shall be used for pressure grouting. Instead, such holes shall be completely plugged with Portland cement mortar.

3.6.24.3 Grouting - When both the masonry structure and the foundation bed are to be grouted, the bed material shall be completely grouted and tested by check cores before starting work on the structure.

Operations must be conducted as to meet conditions encountered during the course of the work. Continuous shifts may be required, or the work may be intermittent.

Only an experienced supervisor shall be in charge of grouting operations; one who is familiar with the equipment, the materials and the grouting process.

For river work, the Contractor shall employ a licensed driver with suitable equipment for inspection and repair of the underwater portions of the work.

All defective materials shall be removed from the surfaces of the masonry to be grouted. Inspection shall be made for points of leakage and indications of voids. Large openings shall be sealed with mortar. Small openings shall be left open to provide vents for air and water. As grouting progresses, the small openings shall be left open or sealed as required. The bases of structures shall be kept clear so that joints and voids may be flushed, and that excess leakage of grout may be observed and corrected.

Generally, the grout mixture shall consist of Portland cement, finely divided mineral filler, and intrusion agent, sand when required and water, all thoroughly mixed and brought to the proper consistency. The amount of sand to be used shall be determined by starting the grouting operation with neat cement-plus-filler grout, and adding sand in gradually increasing proportions until the optimum ratio of sand to cement-plus-filler has been reached which will give a free flowing and satisfactory grout, if it is found that the addition of sand retards the free flow of the grouting materials, the sand shall be omitted or reduced as directed.

Portland Cement shall conform to ASTA Designation C-150, Type I. One bag of cement will be equivalent to 94 pounds of bulk cement, and one cubic foot in volume.

Mineral filler shall be a finely powdered material having a specific surface of not less than 3000 square centimeters per gram, composed essentially of compounds

of amorphous silica, alumina, and iron which possesses the property of combining with lime that is liberated during the process of the hydration of Portland cement. One bag of mineral filler will be considered equivalent to 75 pounds of bulk filter and one cubic foot in volume.

Intrusion agent shall be a compound possessing such characteristics that it will inhibit early stiffening of the grout, tend to hold the solid constituents of the grout in colloidal suspension and expand slightly before the time of initial set of the grout so as to have a neutralizing effect on the setting shrinkage of the grout.

Sand shall consist of hard, tough, durable, uncoated particles. The shape of the particles shall be generally rounded or cubical and reasonably free from flat or elongated pieces. Sand shall be well graded from fine to coarse and the gradation shall conform to the following requirements as delivered to the mixer:

Sieve Designation	Cumulative Percentage by Weight	
U.S. Std. Square Mesh	Passing	Retained
16	95-100	0-5
30	60-85	15-40
50	20-50	50-80
100	10-30	70-90
200	0-5	95-100

Water used in grouting shall be fresh, clean and free from injurious amounts of sewage, oil, acid, alkali, salts or organic matter.

Mixing and Pumping – Grout inserts shall be set in the drilled holes and the interior voids washed clean with water under pressure, prior to the application of the grout. For inclined holes, grout shall be introduced through a pipe smaller than the drilled holes having a short section of flexible hose ("packer") near the end. The pipe and packer shall be inserted nearly to the bottom of the hole and progressively pulled up as grouting is completed at various levels. The grout pressure shall cause the packer to swell and confine the grout to the lower layers.

Grouting shall be started at the lowest row of holes and at the hole nearest the center line of the structure.

Grouting must continue at any one hole until it is completed. If grout appears in adjacent holes or joints at the same elevation, such holes shall be temporarily plugged and grouting continued in the original hole until grout appears at the next adjacent hole at the same elevation or at the next line of holes above the one being grouted. When this condition occurs, grouting of the original hole shall be

discontinued and the grout line moved to the last hole at the lowest elevation at which grout appeared, and the same procedure followed until, all the holes in the lowest line have been grouted, at which time grouting shall proceed in a like manner along the next line of holes above etc., until the entire structure has been completely filled.

Excessive pressure should be avoided to prevent damage and waste of grout. When breakouts occur in the surrounding ground, they shall be plugged, or the grout line shall be moved to another location. If the grout line is removed, grouting may be resumed in the original locations after the elapse of 24 hours. If the breakout cannot be plugged, all grouting work shall be suspended until the next day. New holes shall be drilled and the same procedure followed until grout is brought up into the masonry.

3.6.24.4 Equipment - The minimum equipment to be furnished shall include the following:

Two specially equipped, air-driven, duplex, double acting slush pumps, capable of operating at a maximum discharge pressure of 100 p.s.i. The pumps shall be arranged so that in emergencies the second pump can be put into operation without delay.

A mechanical grout mixer.

A mechanically agitated sump.

A suitable water meter, graduated in cubic feet and tenths.

A tank for auxiliary water supply to be used in flushing and pressure washing operations.

3.6.25 - Waterproofing - Hot Application

The two-coat painted waterproofing shall consist of a primer and two coats of hot bituminous material.

Waterproofing asphalt shall conform to the specification for Asphalt for Damp-proofing and Water proofing (ASTM D 449 Type A).

Primer for use with asphalt in water proofing shall conform to the Specification for Primer for use with Asphalt in Damp-proofing and Water proofing (ASTM D 41).

Waterproofing shall not be applied in wet weather or when the temperature is below 50°F., without approval by the Engineer.

Surfaces to be waterproofed shall be dry and clean. Concrete shall be cured before primers or waterproofing are applied. Asphalt primers shall be applied cold, Painted or mop coats shall be applied hot.

The primer shall be well worked in to give a uniform coating and shall dry at least 24 hours before the first paint or mop coat is applied.

The amount of bitumen for each paint coat or mcp coat shall be not less than 4 ½ gallons for each 100 square ft. of surface. The bitumen shall be stirred frequently while being heated. Kettles shall be equipped with armored thermometers. Surfaces of concrete or steel which may come in contact with waterproofing shall be given one coat of asphaltic primer before the first mopping of asphalt.

Waterproofing (Hot Application) shall be used for all waterproofing work unless otherwise shown in the plans or noted in the specifications.

3.6.26 Waterproofing - Cold Application

Waterproofing of walls below grade shall be done at locations, and to the extent as shown on the drawings.

The materials shall have an asphalt base and shall be suitable for cold application by brush, trowel or spray.

The work shall be done with one prime coat and one top coat, and in accordance with the manufacturer's directions. These directions of the manufacturer shall be followed by the application of additional coats in cases where the product requires such coatings for satisfactory results.

The primer shall conform to the current ASTM Designation D-41.

The top coating shall be a manufactured product, ready for application directly from the containers without heating or other processing.

Materials shall be tested and approved by the City for use on the contract.

Surfaces to receive waterproofing shall be clean and dry. Burrs shall be removed. Holes, joints, and cracks shall be pointed flush with mortar. High spots shall be cut off or ground smooth. Dust and foreign material shall be removed.

Primer shall be applied in quantity sufficient for full coverage of the surfaces. Under-primed and skimped surfaces shall receive additional priming. The prime coat and top coatings shall be thoroughly dry before application of succeeding coats.

Backfilling material shall not be placed against the finished waterproofing in any case until the elapse of 24 hours. The manufacturer's directions shall be followed for certain products where more than 24 hours is required before backfilling.

No waterproofing shall be applied when the air temperature is below 50 degrees F. Higher temperatures may be required for the particular product submitted for use.

Chapter 4 Regulations Governing the Use and/or Closure of the Right-of-Way

4.1 Right-of-Way Management

4.1.1 Authority.

The regulations governing Right-of-Way Management ("Regulations") are promulgated pursuant to Section 5-501 of the Home Rule Charter and Title 11 of the Philadelphia Code. These Regulations governing Right of Way Management, effective January 12, 2006, as amended 2009, 2012 and 2016, are hereby further amended as follows:

4.1.2 Definitions. Capitalized terms that are not otherwise defined in these Right-of-Way Management Regulations shall have the meanings provided in Section 11-701(1) of The Philadelphia Code.

"Aggregate Annual Fee" means the total amount of Annual Fees charged under Section 11-706(1) of The Philadelphia Code to all Licensees, as set forth in Section 11-706(1)(c) of The Philadelphia Code and subsection 4.1.2 of these Regulations.

"Americans with Disability Act Ramp Component" or "ADA Ramp Component" means the cost to construct a one square foot area of an ADA ramp. This component is calculated by the Department of Streets using the average cost of items associated with constructing ADA ramps as part of the city's ADA ramp program. The ADA ramp program is part of the city paving program and dictated by federal ADA guidelines and laws.

"Annual Fee" means the fee charged pursuant to Section 11-706(1) of The Philadelphia Code to Licensees that construct, install, operate or maintain Underground Facilities in the ROW, for the purpose of recovering City costs for managing the Right-of-Way, including the City's Permitting Costs, Ongoing Management Costs, and Street Degradation Allocation.

"Assessment Date" means July 31 of each Fiscal Year.

"Committee of Highway Supervisors" means the advisory committee to the Commissioner provided in Section 11-705(5) of The Philadelphia Code.

"Fiscal Year" or "FY" means the fiscal year of the City, i.e. the annual period commencing on July 1 and ending on June 30.

“Index Component” means an indexed amount added or subtracted from the Street Degradation Fee, to account for any changes in City costs due to the City's resurfacing program. The Index Component adjustment will be calculated by the Department of Streets according to average cost changes from the July 2011 base price for (1) labor and overhead for the City paving operations workforce, (2) material costs paid by the City as set by the Pennsylvania Department of Transportation Asphalt Cement Price Index in publication 408, chapter 110.04, and (3) City milling and preparation contract bid prices. The Index Component may be adjusted monthly and will be posted on the last Friday of each month on a Department of Streets web site as well as communicated to all members of the Committee of Highway Supervisors.

“Ongoing Management Costs” means the costs described in subsection 4.1.9

“Paving Component” means the cost to pave a square foot of street surface. This component is calculated by the Department of Streets using the average cost of materials, equipment and labor to pave one city block and is based on the age of the street surface at the time construction is completed for the construction permit that was obtained.

“Permitting Costs” means the costs described in subsection 4.1.9

“Street Degradation Allocation” means the costs described in subsection 4.1.9

“Street Degradation Allocation Unit Cost Rate” means the per foot charge established to collect the “Street Degradation Allocation” costs described in subsection 4.1.9

“Street Degradation Fee” means the fee charged after the issuance of a Construction Permit, to partially compensate the City for the reduction in the useful life of Streets caused by construction in the ROW, that is provided in Section 11-706(2) of The Philadelphia Code and Section 4.1.9 of these Regulations.

4.1.3 Application for ROW Use License. In accordance with Section 11-701(2) of the Philadelphia Code:

4.1.3.1 Application for a ROW Use License shall be made on the form provided in Appendix A or, as revised by the Streets Department in its sole discretion.

4.1.3.2 Within a reasonable period of time after receiving a complete application, the Commissioner shall make a determination, based on the standards enumerated in Section 11-701(2)(b) of the Philadelphia Code, approving or denying the application in whole or in part. If the application is wholly or partly denied, the determination shall include the reasons for the denial.

4.1.3.3 No fee is currently assessed in connection with an application for a ROW Use License.

4.1.3.4 The Commissioner shall review decisions regarding application fees for ROW Use License at least every three (3) years and make such increases or decreases, by regulation, as are appropriate based on the applicable costs of the City.

4.1.3.5 An owner of Facilities now occupying the Right-of-Way must file an application for a Right-of-Way Use License by a date determined by the Commissioner or his/her designee. New users of the Right-of-Way must submit an application for, and obtain, a Right-of-Way Use License before beginning construction for any Facilities in a Right-of-Way. Applications are available from and shall be filed with the Department of Streets Right-of-Way Unit, Municipal Services Building, Room 940, 15th Street & J.F. Kennedy Blvd., Philadelphia, PA 19102.

4.1.4 Insurance. In accordance with Section 11-701(2)(d) of the Philadelphia Code:

4.1.4.1 General Requirements.

Coverages

Each Licensee shall, at its sole cost and expense, procure and maintain in full force and effect, covering risks associated with the construction, installation, placement, operation, maintenance, use, renewal, replacement, relocation, repair or removal of its Licensee Facilities, the types and minimum limits of insurance specified below. All insurance shall be procured from insurers with an A.M. Best rating of A-VIII which are authorized to do business on a direct basis in the Commonwealth of Pennsylvania or are otherwise acceptable to the City. All insurance required herein shall be written on an "occurrence" basis, or if any policy is written on a claims made basis, the retroactive date may not be advanced beyond the Effective Date of the Right-of-Way Use Agreement and License and coverage shall be maintained in full force and effect for two (2) years alter termination of such Agreement and License, which coverage may be in the form of tail coverage or extended reporting period coverage if agreed by the City and Licensee. The certificate of insurance shall provide for at least thirty (30) days prior written notice to be given to the City in the event coverage is materially changed, cancelled or non-renewed.

The City of Philadelphia, its officers, and employees shall be named as additional insureds on the General Liability Insurance policy procured by Licensee and on any insurance the Licensee requires of any Person, agent, or employee engaged or employed in, about or upon the work by, at the instance of, or with the approval or consent of the Licensee. The coverage of the City as an additional insured shall be limited to the acts or omissions of the Licensee or such Person, agent, servant, or employee.

A certificate of insurance shall evidence the coverage afforded the City and its officers and employees, as additional insureds. The certificate of insurance shall state that such coverage will be primary to any coverage available to them and will be noncontributory.

4.1.4.2 Types and Minimum Limits of Insurance. Each licensee shall furnish the following types and minimum limits of insurance:

Workers' Compensation – per Pennsylvania statutory requirements

Employers' Liability: $100,000 each Accident - Bodily Injury by Accident: $100,000 Each Employee - Bodily Injury by Disease; and $500,000 Policy Limit Bodily Injury by Disease

Commercial general liability insurance. Limit of liability: The Commercial General Liability Insurance Policy shall have:

$2,000,000 limits for Licensees whose Facilities occupy no more than 10,000 linear feet of ROW;

$4,000,000 limits for Licensees whose Facilities occupy no more than 100,000 linear feet of ROW;

$8,000,000 limits for Licensees whose Facilities occupy no more than 1,000,000 linear feet of ROW, and

$10,000,000 limits for Licensees whose Facilities occupy more than 1,000,000 linear feet of ROW.

Types of insurance: Applicable dollar limit, as set forth in (1), per occurrence combined single limit for bodily injury (including death) and property damage liability; applicable dollar limit, as set forth in (1), for personal and advertising injury; applicable dollar limit, as set forth in (1), general aggregate; and $1,000,000 aggregate for products and completed operations.

Coverage: Premises operations; blanket contractual liability; personal injury liability (employee exclusion deleted); products and completed operations; independent contractors; employees and volunteers as additional insureds; cross liability; broad form property damage (including completed operations); and explosion, collapse, underground hazards (XCU).

Commercial Automobile liability insurance.

Limit of liability: $1,000,000 per occurrence combined single limit for bodily-injury (including death) and property damage liability.

Coverage: Owned, non-owned and hired vehicles.

Contractors. Licensee shall require its contractors to procure and maintain, or cause to be procured and maintained, throughout the entire period of construction of the Licensee Facilities, the types of insurance, limits of insurance, and designation of additional insureds which are required of the Licensee by the City of Philadelphia; provided that, with respect to Commercial General Liability Insurance Policies, contractors' limits of liability shall be:

$1,000,000 for Licensees whose Facilities occupy no more than 10,000 linear feet of ROW;

$2,000,000 for Licensees whose Facilities occupy no more than 100,000 linear feet of ROW; and

$4,000,000 for Licensees whose Facilities occupy more than 100,000 linear feet of ROW.

Alternatively, in the absence of contractor adding the City as an additional insured, Licensee will provide excess coverage under its Commercial General Liability Program in the minimum amount specified in this Section 4.1.4.2 for contractors' limits of liability, and the City of Philadelphia, its officers, and employees shall be named as additional insureds on such policy. The coverage of the City as an additional insured shall be limited to the acts or omissions of the Licensee or of persons, agents, or employees engaged or employed in, about or upon the work by, at the instance of, or with the approval or consent of the Licensee.

4.1.5 Evidence of Insurance Coverage.

Certificates of insurance evidencing the required coverages and additional insureds must specifically reference in the description sections of the certificates by number or date the Right-of-Way Use Agreement and License entered into by Licensee and the City. The original certificate of insurance must be submitted to the City's Risk Manager at the following address:

City of Philadelphia

Finance Department

Division of Risk Management

1515 Arch Street, 14th Floor

Philadelphia, PA 19102-1579

(Fax No.: 215-686-1705).

The City reserves the right to inspect on Licensee's site copies of policies of all insurance required under the Right-of-Way Use Agreement and License, or alternatively at the City's option, to require Licensee to demand that its authorized insurance representatives furnish written responses to all inquiries made by the City pertaining to the insurance required under the Agreement at any time upon ten (10) days written notice by the City to such insurance representatives.

4.1.6 Self Insurance

The Commissioner may accept a plan of self-insurance as a substitute for such insurance, if the Commissioner determines that such self-insurance adequately protects the City and the public. In the event that Licensee desires to self-insure any of the coverages listed

above, it shall submit to the Commissioner a certified copy of Licensee's most recent audited financial statement, and such other evidence of its qualifications to act as a self-insurer (e.g., state approval of self-insurance for workers compensation and automobile liability or, for self-insurance of general liability, a confirming letter from a corporate Risk Manager or other corporate officer) as may be requested by the Commissioner. In the event such approval is granted, it is understood and agreed that the City, its officers, and employees shall be entitled to receive the same coverages and benefits under Licensee's self-insurance program that they would have received had the insurance requirements been satisfied by an insurance carrier with an A.M. Best rating of A-VIII which is authorized to do business on a direct basis in the Commonwealth of Pennsylvania or which is otherwise acceptable to the City.

If Licensee self-insures its workers' compensation and employers' liability coverage, Licensee may, in lieu of the foregoing, furnish to the Commissioner a current copy of the state certification form for self-insurance or a current copy of the State Insurance Commissioner's letter of approval, whichever is appropriate. The insurance (including self-insurance) requirements set forth herein are not intended and shall not be construed to modify, limit, or reduce the indemnifications made by Licensee to the City pursuant to Section 11-701(2)(d)(.2) of the Philadelphia Code or the Right-of-Way Use Agreement and License entered into by Licensee and the City, or to limit Licensee's liability under such indemnification to the limits of the policies of insurance (or self-insurance) required to be maintained by Licensee hereunder.

4.1.7 Right of Way Use License and Agreement

4.1.7.1 License Required. In accordance with Section 11-702 of the Philadelphia Code,

No ROW Use License shall be effective, nor shall the applicant receive any rights, benefits, or privileges pursuant to the license, unless and until the applicant has executed a Right-of-Way Use Agreement, in substantially the form provided in Appendix B to these Right-of-Way Management Regulations.

No Person, other than a Franchisee, may own, construct, operate and/or maintain Facilities in the Right-of-Way unless a Right-of-Way Use License is first issued to the owner of such Facilities; provided, however, that a ROW Use License shall not b required for the installation of water and sewer pipes in Plumber's Ditches, or for the installation or operation of public pay telephones and other End User Devices. Newsstand operators are governed by Section 9-212 of The Philadelphia Code and are not required to obtain a ROW Use License.

The ROW Use License is granted pursuant to a fully executed ROW Use License Agreement as required under Section 11-701(2)(a) and Section 11-702, respectively, of the Philadelphia Code, and this Section 4.1.7.

A Right-of-Way Use License shall be for a term often (10) years. A Right-of-Way Use License and the rights, benefits and permissions conferred thereby shall apply to the entire geographic area of the City excepting lands specified in Section 11-701(1)(dd) of the Philadelphia Code.

Any Right-of-Way Use License shall be authorized and issued only by the Commissioner, and shall not become effective unless or until so authorized and issued. In considering such an authorization, the Commissioner shall consider whether the applicant has demonstrated:

that it has no substantial history of non-compliance with applicable law and regulation relating to the management of, and the construction and maintenance of Facilities in, Streets and rights-of-way, wherever located; and

that it possesses all licenses, permits, and authorizations required by the Federal Communications Commission, the PUC, the Commonwealth, and the City as a condition of its using the Right-of-Way and furnishing the Services and operating the Facilities proposed by the applicant. Decisions of the Commissioner with respect to any application for a Right of Way Use License shall be appealable, within thirty days, to the Board of License and Inspection Review.

4.1.7.2 Appeals. Decisions of the Commissioner with respect to any application for a Right of Way Use License shall be appealable, within thirty (30) days, to the Board of License and Inspection Review.

4.1.8 Construction Permits. Pursuant to Section 11-705(1) of the Philadelphia Code, no Person shall construct, install, operate, repair or maintain any Facilities or End-User Device in the Right-of-Way without first obtaining a Construction Permit(s) therefor; provided, however, that, in the event of an Emergency Condition, a Person shall notify the City of Philadelphia Municipal Radio at (215) 686-4514 upon arrival of work crew at the site of the Emergency Condition; and shall apply for a Construction permit within seven (7) calendar days following the day on which the work to correct the Emergency Condition commenced.

4.1.9 Right-of-Way User Fees

4.1.9.1 Annual Fee. Pursuant to Section 11-706(1) of the Philadelphia Code,

Each Licensee shall pay an Annual Fee to compensate the City for its costs incurred in connection with: (1) issuing Construction Permit(s) to Licensee for Underground Facilities located in the ROW; and (2) reviewing, inspecting, and supervising Licensee's on-going use and occupancy of the ROW for construction, installation, operation and/or maintenance of its Underground Facilities. The Annual Fee also partially compensates the City for the reduction in the useful life of a Street caused by Licensee's construction in the ROW.

The Aggregate Annual Fee to be paid by all Licensees shall equal a total of $1,142,524 for Fiscal Year 2018 and shall increase by one (1) per cent for Fiscal Year 2019 to a total of $1,153,950; and shall again increase by one (1) per cent for Fiscal Year 2020 to a total of $1,165,489.

4.1.9.2 On the Assessment Date, the Commissioner shall determine the share of the Aggregate Annual Fee to be assessed each Licensee by allocating the amount of the Aggregate Annual Fee among Licensees in accordance with the method referenced in Section 4.1.9.1

4.1.9.3 The Annual Fee shall be assessed each year, and paid within forty-five (45) days of receipt of the City's invoice.

4.1.9.4 The Annual Fee shall have three components, to recover the following three categories of City cost relating to management of the ROW:

(1) Permitting Costs;

(2) On-going Management Costs;

(3) Street Degradation Allocation.

The Street Degradation Allocation shall be assessed annually according to Licensee’s permitted activity during the prior Fiscal Year. The assessment rate is determined by the Street Degradation Allocation Unit Cost Rate. The Street Degradation Fee is a separate fee and is not a component of the Annual Fee.

4.1.9.5 The total amount of the Aggregate Annual Fee allocated to Permitting Costs and Ongoing Management Costs together shall be $916,662, $925,829, and $935,087 for Fiscal Years 2018, 2019, and 2020, respectively (which amounts include the one (1) per cent increases provided in subsection 4.1.9.1. The dollar amount of the Permitting Costs component and the dollar amount of the Ongoing Management Costs component shall be determined as follows:

The Commissioner will determine the percentage of the City's ROW management costs attributable to Permitting Costs and the percentage attributable to Ongoing Management Costs.

The percentage for Permitting Costs will be multiplied by the amount of the Aggregate Annual Fee that applies to the then current Fiscal Year to determine the dollar amount of Permitting Costs to be allocated among Licensees.

The percentage for Ongoing Management Costs will be multiplied by the amount of the Aggregate Annual Fee that applies to the then current Fiscal Year to determine the dollar amount of Ongoing Management Costs to be allocated among Licensees.

4.1.9.6 The Street Degradation Allocation shall be $225,862, $228,121, and $230,402 for Fiscal Years 2018, 2019, and 2020, respectively (which amounts

include the one (1) per cent increases provided in subsection 4.1.9.1. The Street Degradation Allocation Unit Cost Rate is the Street Degradation Allocation divided by the total number of linear feet for which all Licensees received street opening permits in the Fiscal Year preceding the Assessment Date. For Fiscal year 2018, the Street Degradation Allocation Unit Cost Rate shall be $4.36 per linear foot, and for subsequent Fiscal Years shall be calculated near the start of each such Fiscal Year and communicated to all Licensees.

4.1.9.7 Each Licensee that is not a Franchisee shall pay its allocated share of Permitting Costs, Ongoing Management Costs, and Street Degradation Allocation. The total Annual Fee assessed to each Licensee shall be the sum of such shares. A Licensee that is a Franchisee is deemed to pay its allocated share of Ongoing Management Costs and Street Degradation Allocation as part of any franchise fee it pays to the City pursuant to its Franchise Agreement, and shall receive a credit for the components of the Annual Fee up to the amount of franchise fees paid for the Fiscal Year. However, a Franchisee shall pay its allocated share of Permitting Costs as an Annual Fee separate from, and in addition to, any franchise fees it pays to the City.

4.1.9.8 Each Licensee's allocated share of Permitting Costs shall be based on the number of linear feet for which the Licensee received Construction Permits in the Fiscal Year preceding the Assessment Date, expressed as a percentage of the total number of linear feet for which all Licensees received street opening permits in the previous Fiscal Year.

4.1.9.9 Each Licensee's allocated share of Ongoing Management Costs shall be based on the total number of linear feet of the Licensee's Underground Facilities installed in the ROW as of the end of the Fiscal Year preceding the Assessment Date, expressed as a percentage of the total number of linear feet of Underground Facilities installed in the ROW by all Licensees in the prior Fiscal Year.

4.1.9.10 Each Licensee's allocated share of Street Degradation Allocation Costs shall be calculated as the product of the Street Degradation Allocation Unit Cost Rate, multiplied by the number of linear feet for which the Licensee received Construction Permits in the prior Fiscal Year.

4.1.9.11 Method for Determining the Annual Fee of Each Licensee. The method of determining the Annual Fee of each Licensee shall be established and set forth by the Commissioner in writing, upon consultation with the Committee of Highway Supervisors.

4.1.10 Street Degradation Fee. In accordance with Section 11-706(2) of the Philadelphia Code,

4.1.10.1 after the issuance of a Construction Permit, the applicant for the Construction Permit shall pay a fee to partially compensate the City for the reduction

in the useful life of a Street caused by applicant's construction in the ROW. The Total Street Degradation Fee is comprised of three (3) components:

- Index Component;
- Paving Component;
- ADA Ramp Component.

4.1.10.2 Calculation of Street Degradation Fee

For street excavation occurring less than two (2) years following the resurfacing or reconstruction of a street, the total Street Degradation Fee shall be $7.23 per square foot of street surface excavated (of which $0.00 is the ADA Ramp Component and $7.23 is the Paving Component), as adjusted by the Index Component.

For Street excavation occurring at least two (2) years but less than five (5) years following the resurfacing or reconstruction of a street, the total Street Degradation Fee shall be $5.93 per square foot of street surface excavated (of which $0.00 is the ADA Ramp Component and $5.93 is the Paving Component), as adjusted by the Index Component.

For street excavation occurring at least five (5) years but less than fifteen (15) years following the resurfacing or reconstruction of a street, the total Street Degradation Fee shall be $2.33 per square foot of street surface excavated (of which $0.00 is the ADA Ramp Component and $2.33 is the Paving Component), as adjusted by the Index Component.

No Street Degradation Fee shall be charged for construction a Street that has not been resurfaced or reconstructed for more than fifteen (15) years.

No Street Degradation Fee shall be charged for construction required by and directly related to an Emergency Condition.

Consistent with Section 4.1.9(h) of these Regulations, no Street Degradation Fee shall be owed by a Franchisee whose compensation to the City required under its Franchise whose compensation to the City required under its Franchise Agreement exceeds its fees due under this Section 4.1.10.

4.1.11 Application to City Agencies. In accordance with Section 11-706(3) of The Philadelphia Code, City Agencies shall be required to pay the Street Degradation Fee and an annual ROW management fee equal to or commensurate with the City's costs in connection with issuing Construction Permits for Underground Facilities and reviewing, inspecting and supervising the City Agency's ongoing use and occupancy of the Right-of-Way for construction, operation and/or maintenance of its Underground Facilities; except that the Department of Streets and Public Property shall not be required to pay a fee that compensates these Departments for their own costs of managing the Right-of-Way.

4.1.12 Petitions for Reconsideration.

4.1.12.1 A Licensee that believes its allocated share of the Annual Fee is incorrect for the current Fiscal Year, or that seeks an adjustment of a prior year's allocation based on the actual number of feet permitted or constructed during that year, may petition the Commissioner for reconsideration.

4.1.12.2 Petitions for reconsideration of a current Fiscal Year's allocation must be submitted within fifteen (15) days following the date of the City's invoice. Petitions for reconsideration of a prior Fiscal Year's allocation must be submitted within fifteen (15) days following the Assessment Date for the next Fiscal Year.

4.1.12.3 Petitions must include documentation sufficient to demonstrate that the allocation is incorrect, including, information that challenges the linear feet of installed or permitted Underground Facilities that City attributes to the Licensee; as-built plans; Underground Facilities audit findings, and/or other information sufficient to demonstrate the number of linear feet claimed by the Licensee.

4.1.13 Review and Recalculation of ROW User Fees. Pursuant to Section 11-706(1)(d) and 11-706(2) of the Philadelphia Code, no more frequently than every three (3) years and after consultation with the Committee of Highway Supervisors, the Commissioner shall review and, if necessary, recalculate the foregoing Right-of-Way user fees to reflect the City's actual costs incurred in connection with the activities described in Section 11-706(1)(a) of The Philadelphia Code and Street degradation caused by construction by construction in the ROW by Licensees.

4.1.14 Dumpsters

4.2 Regulations Governing Temporary Street and Sidewalk Closures

4.2.1 Authority. These regulations governing temporary street closures ("Regulations") are promulgated pursuant to Sections 5-500 and 8-407 of the Philadelphia Home Rule Charter and Section 11-611 of the Philadelphia Code.

4.2.2 Definitions. In these regulations the following definitions shall apply:

Applicant: The building owner or otherwise responsible person who applies for any permit addressed by these regulations;

City: the City of Philadelphia;

Commissioner: the Streets Commissioner and his or her designees;

Department: The Streets Department of the City of Philadelphia;

Permittee: the person or agency to whom the permit has been issued.

Right-of-Way: City streets, sidewalks, and the surface of the space above and below any real property in the City in which the City has a regulatory interest, or interest as a trustee of the public, as more fully described in Section 11-701(1)(dd) of the Philadelphia Code;

Temporary Street Occupancy Permit ("TSOP"): A permit issued by the Department to an Applicant under these regulations that authorizes the temporary closure of all or part of the Right-of-Way, including the street, curb, or sidewalk.

4.2.3 Scope of Regulations

These Regulations apply to the issuance of permits for temporary closures of the Right-of-Wat under Section 11-611 of the Philadelphia Code for loading and unloading, building maintenance, and related activities. They do not apply to other closures of the Right-of-Way, including but not limited to, emergency closures, excavations and street openings, construction activities at adjacent properties or recreational activities.

4.2.4 Permit Required.

4.2.4.1 Proof of Permit. No Person shall close all or a portion of a City street or sidewalk to vehicular or pedestrian traffic for loading and unloading, building maintenance and related activities without a TSOP issued under these regulations. Such TSOP shall be available for inspection upon request by any City official. Copies of the permit shall be posted at the site during the entire time of the closure at such locations and in such manner as the Department specifies, so as to permit public inspection of such permit.

4.2.4.2 Violation of TSOP Requirements. Failure to comply with any of the terms of the TSOP or these regulations or to pay promptly the permit fees as required shall be cause for suspension or revocation of the permit and, in instances of egregious or repeat violations, may be cause for denying additional TSOPs. The Department shall serve a notice on the responsible Permittee of any violation of the permit, and may require corrective action to be taken by the Permitee.

4.2.4.3 Period of Validity of Permit. TSOPs shall be valid for the period indicated on the permit. TSOPs may be issued for a maximum period no longer than the period allow under Section 11-611 of the Philadelphia Code, and as it may be amended. TSOPs may be renewed for the same or a shorter period upon application by the Permittee, payment of required fees and approval by the Department.

4.2.5 Method of Making Application and Review

4.2.5.1 Application. Applicants seeking permission for a TSOP shall file with the Department:

A written application on a form as provided by the Department indicating the full name and business address of the applicant, and a statement of the character, purpose, and duration of the proposed activity;

An electronic submittal showing the complete details of the activity and indicating the character and location of all impacted sidewalks, streets, parking

spots, curb cuts, loading zones, adjacent buildings, residents, businesses and transit routes; and

A summary of such other information as may be necessary to enable the Commissioner to reach a full and definite understanding of the need for the TSOP.

4.2.5.2 Prerequisites for the Issuance of a Permit. No permit will be issued until the Applicant has met all requirements of the Department, as identified in the TSOP application.

4.2.5.3 Review and Approval Timeline. The Department will review TSOP applications and determine if the application is complete or if additional information is required. The Department will promptly advise the Applicant if the application is incomplete or additional information is required.

4.2.6 Standards and Conditions

4.2.6.1 No TSOP shall be approved unless the Department has determined:

The activity identified in the application cannot reasonably be performed without the closure of all or a portion of the Right-of-Way;

The closure will cause the minimum obstruction of the Right-of-Way necessary for the activity;

The duration and frequency of the closure are minimized consistent with what is necessary for the activity;

The traffic disruption can be mitigated by temporary measures such as flaggers, signage, detours and other traffic controls; and

The impact on any other users of the Right-of-Way is not an unreasonable hardship or impediment to their uses.

4.2.6.2 Special Conditions. The Department may determine that special TSOP conditions are required to ensure public safety, including but not limited to, signage, traffic controls, and lighting.

4.2.6.3 No vehicle may park, stop or stand in any sidewalk or roadway lane that has been closed, other than vehicles in the process of loading or unloading materials, equipment or supplies, or which are otherwise required for the activity for which the permit has been obtained. A vehicle used to transport contractors or their employees or any other persons to or from the location of the closure shall not be considered to be a vehicle required for such activity.

4.2.6.4 Police or Other Assistance. The City may require Police or other City assistance in conjunction with use of the TSOP.

4.2.6.5 Notifications. The Department may require the Permittee to provide reasonable notification to persons potentially impacted by the TSOP.

4.2.6.6 Required Representations. Applicant shall affirm, on the TSOP application form that:

Application is compliant with any insurance requirements as may be established by the City's Risk Manager as identified by the City; and

Applicant has affirmed the indemnification obligations of the City set forth in Section 4.2.7 of these regulations.

4.2.6.7 Suspension of TSOPs. The Department may at any time order the immediate reopening of any sidewalk or roadway lane that has been temporarily closed if the Department finds that the closure is no longer necessary for the activity for which the TSOP was issued, even if the TSOP has not yet expired.

4.2.7 Responsibility for Injuries to Persons or Property. No Liability to City. The Permittee shall be responsible for any injury to any person or any damage to any property resulting from or by the occupation of the Right-of-Way. The Permittee shall indemnify, release, and save harmless the City from all suits or actions of every character, name and description, brought for or on account of any injuries or damages received or sustained by any property, person or persons by or from the activities herein indicated, the occupation of the Right-of-Way thereby, negligence in safeguarding the work, improper methods or materials used or by or on account of any act or omission of the said Permittee or Permittee's agents or employees.

4.2.8 Permit Fees. Notwithstanding any existing fee provisions to the contrary, for a TSOP that permits closure of all or a portion of the Right-of-Way for multiple intermittent periods while the TSOP is in effect, the fees are as follows:

4.2.8.1 Permit review.

The review of a permit application that does not require a traffic study: $250.00

If the review determines that a traffic study is required, the additional cost of permit review: $500.

4.2.8.2 Permit Renewal.

If no changes to the permit are requested by the applicant: $100.00

If changes to the permit are requested by the applicant or determined necessary by the Department: $250.00

If an additional traffic study is required for renewal, the additional cost of permit review: $500.00.

4.2.8.3 Monitoring and Inspection Fee. The Department shall monitor and inspect the TSOP location. For fiscal year 2019 the fee shall be $728.13 per 90 day

period of the TSOP. All monitoring and inspection fees shall be paid at the time of application. The fees as established in this Section shall be increased annually by three (3) percent at the start of each City fiscal year.

4.2.9 Repeal of Prior Versions. Repeal. Regulations of the Department of Streets authorized by Section 11-611 of the Philadelphia Code establishing standards and permit conditions, but not including regulations pertaining to fees, are repealed in their entirety.

4.2.10 Effective Date.These Regulations shall be effective upon completion of the procedures required by Section 8-407 of the Philadelphia Home Rule Charter.

4.3 Regulations Governing Sidewalk Closure Permits for Construction Activity

4.3.1 Engineering Report or Site Safety Plan Required.

4.3.1.1 All permit applications associated with any building construction or building demolition requesting sidewalk closures, shelter platforms, and/or relocation of pedestrian paths into a parking lane, must be accompanied by an engineering report or site safety plan stating that the method requested to protect pedestrians is appropriate for the planned activity. The examiner shall note on the permit that "L&I Building Code review and approval of this site safety plan is required";

4.3.1.2 The site safety plan or engineering report shall be signed and sealed by a professional engineer licensed in the Commonwealth of Pennsylvania;

4.3.1.3 A copy of any sidewalk closure or shelter platform permit shall be posted at the site during the entire time of the closure in the same location as the associated building permit(s);

4.3.1.4 All sidewalk closures and relocated pedestrian paths associated with building construction or demolition shall comply with the latest PennDOT published standards and additional details that may be provided by the Department of Streets.

4.3.1.5 Applicants requesting a sidewalk closure for maintenance activity (e.g., cleaning, pointing, painting, step or window replacement) may be issued a full sidewalk closure permit without submitting an engineering report or site safety plan provided that the closure lasts no longer than seven days and the work occurs no higher than thirty-five feet (35') above the sidewalk level. The examiner shall note on the permit that a sidewalk closure is authorized (provided that all work requiring the closure is completed within seven days). If the closure will extend beyond seven days, the permit application must be accompanied by an analysis prepared by a professional engineer licensed the Commonwealth of Pennsylvania requesting the additional time.

4.3.1.6 A building permit issued by the Department of Licenses of Inspections is required for the construction of all shelter platforms.

4.3.2 Permit Fees for Placing Construction materials in the Roadway

4.3.2.1 Fees for permits for placing construction materials in the roadway pursuant to Code Section 11-605 are $1.00 per linear foot of occupancy per week, with a minimum fee of $40 per week.

4.3.2.2 Occupancy for any period of time less than seven days shall be charged as a full week.

4.3.2.3 Fees for permits for placing construction equipment in the roadway pursuant to Code Section 11-610 are as follows:

Construction dumpsters. For permits for the placement of a construction dumpster, the fee shall be $40 per week.

Partial Street Closures. For permits for the closure or occupancy of sidewalks, parking lanes or travel lanes for the placement or maintenance of all other construction equipment, fees shall be charged on a weekly basis as set forth below, per linear foot of closure or occupancy, with a minimum fee of $40 per block and a maximum yearly fee of $50,000 per type of closure per block. Additionally, for full sidewalk closures, after the first week the minimum weekly fee per block will be $200 in Center City and Uiversity City and $100 in all other areas.

Type of Closure	Center City & University City	All other areas
Sidewalk shelter platform with 6 foot width pedestrian walkway	No fee	No fee
Partial Sidewalk Closure	$1.00	$0.50
Full sidewalk closure accompanied by creation of protected footway in parking lane.	$1.50	$0.75
Parking Lane	$2.00	$1.00
Full Sidewalk Closure	$3.00	$1.50
Travel Lane	$3.00	$1.50

4.4 Fees for Street Closures

4.4.1 Full Street Closures. For permits for full street closures, fees shall be charged as follows:

4.4.1.1 For closures associated with helicopter lifts, the fee shall be $250 for a permit of up to six hours for up to ten blocks, plus $50 for each block in excess of ten blocks.

4.4.1.2 For all other permits for periods of five days or less, the fee shall be $125 per day per block with any period of less than twenty four hours charged as a full day.

4.4.1.3 For any period in excess of five days, the following fees shall be charged on a weekly basis per block, with a maximum fee per block of $50,000 in Center City and University City and $25,000 in all other areas:

Center City and University City: $1000

All other areas: $500

4.4.1.4 for fees charged on a weekly basis, closure or occupancy for any period of time less than seven days shall be charged as a full week.

4.4.1.5 for fees charged per block, full closure of a portion of a block shall constitute closure of a block.

4.4.2 Permit Fees for Temporary Street Closures Under Code Section 11-611.

4.4.2.1 Fees for permits for the temporary closure of sidewalks, parking lanes, or travel lanes for building maintenance, loading or unloading ore related activities pursuant to section 11-611 of the Code shall be as follows:

For "Temporary No Parking Signs" the fee shall be $25 per day. A maximum of forty linear feet shall be posted. The maximum posting duration shall be forty-eight hours.

For partial sidewalk closures for periodic window washing, the fee shall be $150 per block per year.

All other permits under section 11-611 shall be charged on a weekly basis as set forth below, per linear foot of closure or occupancy, with a minimum weekly fee of $40 per block, and a maximum yearly fee of $50,000 per type of closure per block. Additionally, for full sidewalk closures, after the first week the minimum weekly fee per block will be $200 in Center City and University City and $100 in all other areas.

Type of Closure	Center City & University City	All other areas
Sidewalk shelter platform with 6 foot width pedestrian walkway	No fee	No fee
Partial Sidewalk Closure	$1.00	$0.50
Full sidewalk closure accompanied by creation of protected footway in parking lane.	$1.50	$0.75
Parking Lane	$2.00	$1.00

Full Sidewalk Closure	$3.00	$1.50
Travel Lane	$3.00	$1.50

For permits charged on a weekly basis, closure or occupancy for any period of time less than seven days shall be charged as a full week.

4.4.3 Permit Fees for Placement of Portable On-Demand Storage Units (PODS)

The fee for a permit to place a POD in the public right-of-way pursuant to Section 11-804 of the Code shall be $40

4.4.4 Supplemental Inspection Fees. If an activity requires a permit or action by the Department under Title 11 of the Code for which a fee or a change is established by regulation, and the activity is carried out before such permit or action by the Department is obtained, the person or persons responsible for obtaining such a permit or action shall pay, in addition to the permit fee or other charge, an inspection fee equal to the amount of the permit fee or other charged, in order to obtain the permit or action by the Department.

4.5 Bus Loading Zones

4.5.1 General

4.5.1.1 The Philadelphia Code, Chapter 12-907 states that "The Department may designate bus stops, bus stands, taxicab stands, and stands for other passenger common-carrier motor vehicles when it determines such stands are necessary and justified by traffic conditions."

4.5.1.2 The City of Philadelphia finds that Intercity and Charter Buses parking and loading passengers on the streets of the City frequently interfere with traffic and create health and safety concerns that this Regulation is intended to address.

4.5.1.3 An Intercity or Charter Bus Operator shall not occupy any portion of the public right-of-way for loading or unloading passengers from an Intercity or Charter Bus unless the Operator holds an Intercity or Charter Bus Loading Zone permit issued by the Department.

4.5.2 Definitions. In these regulations, the following definitions shall apply:

Bus Loading Zone. A fixed area in the roadway parallel and adjacent to the curb, not to exceed 65 feet in length and designated by appropriate signs, set aside for parking and loading of Intercity or Charter Buses.

Bus Operator. Any person or company which operates an Intercity or Charter Bus on the streets of the City.

Charter Bus. A motor bus engaged or hired by a particular organization or group of persons for their exclusive use for a specific purpose or journey, or during a specific period of time. Tour Buses, as defined by Section 9-407 of the Philadelphia Code, and Shuttle Buses owned by private entities for the transportation of members, are not Charter Buses for the purposes of these Regulations.

Department. The Department of Streets.

Exclusive Bus Loading Zone. A Bus Loading Zone reserved for exclusive use by the buses of a single specified Bus Operator.

Intercity Bus. A motor bus operated on the streets for the purpose of transporting ticketed passengers between Philadelphia and locations outside of Philadelphia. SEPTA, New Jersey Transit, or other public transit buses are not Intercity Buses for purposes of these Regulations.

Shared Bus Loading Zone. A Bus Loading Zone used by more than one specified Bus Operator.

Temporary Bus Loading Zone. A Bus Loading Zone established for one or more days to allow for the loading and unloading of Intercity or Charter Buses.

4.5.3 Application for Bus Loading Zone Permit

4.5.3.1 Any Bus Operator requesting a Bus Loading Zone shall make written application to the Department. After approval of such application by the Department and the payment of a fee as specified below, a permit for the Bus Loading Zone may be issued. The permit shall contain such conditions as the Department may prescribe.

4.5.3.2 The application for the Bus Loading Zone permit is available on the Department's website along with instructions.

4.5.3.3 Bus Operators may apply for either an Exclusive or Shared Bus Loading Zone based on expected use. Applications for a Shared Bus Loading Zone permit will be approved only if more than one Bus Operator has submitted an application for the same location.

4.5.3.4 With the application, the Bus Operator must submit a copy of their scheduled arrivals and departures for the Bus Loading Zone and a copy of their routing from arterial roadways to the Bus Zone.

4.5.4 Review of Application; Approval or Denial

4.5.4.1 In determining whether a Bus Loading Zone permit shall be granted, the Department shall consider the following factors:

Direct effect on vehicular and pedestrian traffic;
The Intercity Bus service schedule, peak hour concentration, and anticipated traffic conditions;
The character and use of the block on which the proposed zone is to be situated;
The number of passengers expected to board or disembark at any given time and their anticipated effect on the neighborhood;
The anticipated effect on nearby public transit systems;
The existing parking regulations and ordinances pertaining to the block;
The policies contained in the Complete Streets Design Handbook; and

Any other effect of the proposed operations in public space on public health and safety and the efficient and safe operation of the existing transportation network, including pedestrian, vehicle, and all other modes of transportation.

4.5.4.2 An approved Bus Loading Zone permit shall be valid for a period of one year and shall not be transferable. Temporary Bus Loading Zone permits shall be valid for the dates listed on the permit.

4.5.5 Renewals

4.5.5.1 An application for the renewal of the permit shall be submitted 60 days prior to the expiration of the current permit, together with payment of required fee.

4.5.5.2 For renewal applications, the Bus Operator must submit a written safety report that includes all vehicular accidents involving the Operator's buses within the Bus Loading Zone. For the first year of renewal, the report should be for the nine (9) month period prior to the renewal application.

4.5.5.3 For each subsequent renewal year, the report should be for the one year period prior to the renewal application. These reports shall be submitted with the permit renewal application.

4.5.6 Revocation

Nothing in this Regulation shall be construed as conveying any right, title or interest in the right-of-way. The Department may, at any time, revoke the Bus Loading Zone permit. Upon notification, the Bus Operator must cease operations at the Bus Loading Zone within thirty (30) days.

4.5.7 Fees for Bus Loading Zones

Upon approval by Department of the application or renewal application for an Intercity or Charter Bus Zone, the Operator shall pay to the Department $5,000 per year for an Exclusive Bus Loading Zone, or $2,500 per Bus Operator, per year for a Shared Bus Loading Zone, or $75 per day for a Temporary Bus Loading Zone.

4.6 Pedicabs Regulations

4.6.1 License Required

4.6.1.1 Complete and submit licensure License application form on the Streets Department website with payment of a non-refundable $100 fee.

4.6.1.2 Upon approval of the license application, license fees of $200.00 for the first pedicab and $100.00 for each additional pedicab on the application shall be paid prior to any operation of the pedicab.

4.6.1.3 The license for a pedicab shall be valid for one year from the date of issue. The licensee shall submit a renewal application 45 days prior to the expiration

date of the license. The annual license fee shall be included with the renewal application. Applications submitted less than 45 days before the expiration date cannot be guaranteed renewal by the expiration date. A renewal application shall include a safety report for all vehicles covered by the application for the previous year. The format of this report is located on the Street Department's website.

4.6.1.4 Submit a copy of the valid Pennsylvania driver's license required for each pedicab driver at the time of application. Additional drivers may be added to the list of pedicab operators in between renewals for a fee of $25.00 for each roster update processed.

4.6.1.5 Submit proof of compliance with insurance requirements for the operation of a pedicab, as determined by the City of Philadelphia's Risk Manager and posted on the Streets Department website.

4.6.1.6 Submit a written description of the training to be given to each pedicab driver prior to the driver's operation of a pedicab.

4.6.2 §9-410 (3) License Requirements

Upon approval of the application and assignment of license number, the licensee shall provide a license plate for each pedicab, on which the license number shall be clearly and legibly displayed in letters that are at least four inches in height. The license shall be placed on the rear of the pedicab below the retro-reflective strip.

4.6.3 §9-410 (4) Pedicab Routes and Hours of Operation

4.6.3.1 Licensees shall operate pedicabs only on routes approved by the Streets Department as set forth in the current list of "Street Restrictions for Pedicab Operations", published on the Streets Department website. This list is subject to change. Licensees and drivers who provide valid e-mail information will be modified before prohibitions or restrictions are changed. No Pedicabs may be operated outside the approved routes and times when used for hire.

4.6.3.2 No pedicab intended to operate in a bike lane shall be wider than 4.5 feet.

4.6.3.3 Pedicabs shall not be operated for hire after dusk, unless expressly permitted by notice on the Streets Department website. Time of day regulations, such as rush hour restrictions and prohibitions, will be posted on the Streets Department's website.

4.6.3.4 Pedicabs shall not operate on sidewalks, shared-use paths or trails.

4.6.3.5 When operating on streets with only one travel lane in each direction, pedicab drivers shall curb their vehicle at least every two blocks to permit any queued vehicles to pass.

4.6.3.6 Pedicabs shall not board or discharge passengers from a roadway travel lane.

4.6.4 Required Equipment of Pedicabs

In accordance with the Vehicle Code, pedicabs shall be equipped with lights for nighttime or inclement- weather operation. The lights shall be used during inclement weather.

4.7 Regulations Governing Pedestrian Enhancements

4.7.1 Guidelines. Pursuant to section 11-613 of the Philadelphia Code, the Department of Streets adopts the following Guidelines and Applications, which are attached hereto and made a part hereof:

Pedestrian Plaza Guidelines and Application (Exhibit "A")

Parklet Guidelines and Application (Exhibit "B").

Bike Corral Guidelines and Application (Exhibit "C").

4.7.2 Applications.

4.7.2.1 Pedestrian Plaza. Applicants seeking to install any Pedestrian Plaza, as defined in section 11-601(8), must submit a Parklet Application to the Department of Streets and receive a Pedestrian Enhancement Permit issued by the Department of Licenses and Inspection, before installing any such Pedestrian Plaza.

4.7.2.2 Parklet. Applicants seeking to install any Parklet, as defined in section 11-601(8), must submit a Parklet Application to the Department of Streets and receive a Pedestrian Enhancement Permit issued by the Department of Licenses and Inspection, before installing any such Parklet.

4.7.2.3 Bike Corral. Applicants seeking to construct a Bike Corral, as defined in section 11-601(8), must submit a Bike Corral Application to the Department of Streets and receive a Pedestrian Enhancement Permit issued by the Department of Licenses and Inspection, before constructing any such Bike Corral.

4.7.3 Guidelines. Applications for Pedestrian Enhancement Permit shall not be approved unless they comply with the general requirements of Chapter 11 of the Philadelphia Code, and the Guidelines adopted above for specific types of Pedestrian Enhancements.

4.7.4 Fees. The fee for any Pedestrian Enhancement Permit shall be $125.

4.8 Structures in the Right of Way

4.8.1 Newsstands and Newspaper Honor Boxes.

4.8.1.1 No newsstand shall be operated until it has been licensed in accordance with Section 9-205 and in accordance with the requirements of these regulations.

4.8.1.2 The Department of Licenses and Inspections shall, upon the recommendation of the Department of Streets, revoke any license issued for a newsstand location for a violation of these regulations.

4.8.1.3 Any person whose application for a license has been denied or whose license has been revoked or who is aggrieved by an order or notice of violation directed to him, or requiring any action, forbearance or compliance from him, may appeal to the Board of License and Inspection Review in accordance with Section 5-1005 of the Charter and the procedure prescribed by that Board.

4.8.1.4 Any person whose application for a license has been denied shall not operate a newsstand pending final determination of the said denial by the Board of License and Inspection Review. However, while an appeal of a revocation, notice of violation or order is pending, compliance with such revocation, notice of violation or order shall not be required unless the Department of Licenses and Inspections and the Department of Streets certify in writing that immediate compliance is necessary to protect the public interest.

4.8.1.5 Application for a license to operate a newsstand shall be made on forms provided by the Department of Licenses and Inspections. A separate application must be filed for each newsstand location. When more than one person operates a newsstand, each operator shall join in the application for the license. This, however, shall not apply to helpers of operators. The application shall be accompanied by a sketch of the newsstand showing its dimensions, its location in relation to the curb line and the building line, and its position in the block.

4.8.1.6 Applications will be approved by the Department of Streets prior to the issuance of the initial license. Thereafter, the license will be renewed annually without submission of an application.

4.8.1.7 The Department of Licenses and Inspections shall not license more than:

(1) one newsstand on any corner;

(2) two newsstands at any intersection;

(3) two newsstands on one side of one block; provided, however, that newsstands existing at the time of the filing of these regulations at locations which are in violation of this section but which meet all other requirements of these regulations, shall be licensed annually during the continued operation of the newsstand by the present operator.

4.8.1.8 Upon payment of the annual license fee and continued compliance with these regulations, the Department of Licenses and Inspections shall issue a license which shall be affixed to the newsstand.

4.8.1.9 No license for the operation of a newsstand shall be transferred, assigned or in any way altered. Successors in interest of duly licensed newsstands shall be

required to obtain a license from the Department of Licenses and Inspections as a prerequisite to lawful operation. Upon payment of the annual license fee and continued compliance with these regulations, the Department of Licenses and Inspections shall issue a license which shall be affixed to the newsstand.

4.8.1.10 Newsstands shall not occupy more than twenty-eight square feet of sidewalk space or exceed a height of seven feet.

4.8.1.11 Newsstands must be located not less than eighteen inches inside the curb line, must be clear of the full width of the sidewalk on the intersecting street and in no case extend past the point of curve of the radius corner.

4.8.1.12 Newsstands and honor boxes shall not be placed on the sidewalk of any street so as to reduce the footway space to less than six feet; provided, however, that the Department of Streets may change the footway space required for any street, but no such change shall require more than eight feet nor allow less than four feet of free footway space.

4.8.1.13 Newsstands shall be located only at the curb line, except that with the consent of the owner of the property abutting the sidewalk they may be located at the building line of the property.

4.8.1.14 Newsstands shall not be located on traffic islands, on street dividers or in any manner that would interfere with a fire hydrant hose connection. Honor boxes shall not be attached to fire hydrants. Honor boxes located on traffic islands or street dividers shall be removed on order of the Department of Streets, if they are determined to be hazardous to pedestrian or vehicular traffic.

4.8.1.15 Honor boxes must be constructed or fastened so as to prevent them from falling over or being moved from their location. Honor boxes are to be so constructed as to prevent their contents from being scattered or carried by the elements onto any street, sidewalk or other public place or upon private premises.

4.8.1.16 Attachments, racks, benches, boxes or similar items may not be externally attached to or adjacent to newsstands.

4.8.1.17 No commercial advertising, exclusive of the name of a news-paper or publication sold or in connection with the contents of such newspapers or publications, will be permitted on newsstands and honor boxes.

4.8.1.18 Kiosks (subway entrance or exit) may not be used for display or sale purposes.

4.8.1.19 Newsstand operators shall not permit the area surrounding their newsstands to become littered as a result of the operation of the stands.

4.8.1.20 Newsstands and honor boxes that are not in use for the sale of newspapers for a period of twenty days or newsstands and honor boxes that are

not maintained in accordance with these regulations shall be presumed abandoned and will be removed by the Department of Streets. The licenses for such newsstands shall be revoked. Upon payment of removal costs, the owner of any such newsstand or honor box may redeem the same.

4.8.1.21 Any newsstand or honor box that fails to comply with these regulations shall be removed by the Department of Streets and taken to a Highway Store yard. They can be redeemed by the owner upon payment of removal costs.

4.8.2 Applications for the Installation of Curb or Sidewalk Pipe Posts on Paved Sidewalks

4.8.2.1 Written applications for permits shall be submitted to the Contract and permit Unit, Department of Streets, Room 1012 City Hall Annex.

4.8.2.2 Four copies of a plan showing the locations of the proposed posts, drawn to scale of a 1/8-inch - 1 foot, on paper 8 1/2 x 11 inches in size or multiples of the same shall be filed with the application.

4.8.2.3 Those pipe posts shall be installed in accordance with Section 11-604 of The Philadelphia Code, as amended by ordinance of City Council approved February 13, 1963.

4.8.2.4 The installation of pipe posts may be permitted on paved footways of any street at locations to be approved by the Department of Streets. Such installations may be made provided such posts:

(1) extend 42 inches above the footway grade, and 2 feet below such grades;

(2) are centered not more than 10 feet apart;

(3) are centered on a line parallel with the curb lines 18 inches back of the face of the curb;

(4) have an inside diameter of six inches, are filled with concrete and have a metal cap;

(5) are not set within 2 feet of any inlet or manhole.

The pipe posts shall conform to the design and specifications of the Department of Streets.

The posts shall be painted a primer coat of ready mixed red lead and one finish coat of ready mixed standard aluminum paint.

4.8.3 Regulation of the Department of Streets: Banner Program on Streetlights

4.8.3.1 Whereas the City has employed the following Banner Program for several years and now wishes to formalize it; No individual shall post any banner on any streetlight pole without first obtaining the approval of: (1) the Streets Department

or its designee (frequently, a Business Improvement District in which the streetlight pole is located), or (2) the Fairmount Park Commission or its designee, and the Art Commission (as required by section 5-903 of the Home Rule Charter).

4.8.3.2 Where the applicant wishes to post a banner on a streetlight within the jurisdiction of the Fairmount Park Commission, the applicant shall obtain the approval of the Fai1mount Park Commission or its designee, and where the applicant wishes to post a banner on a streetlight anywhere else in the City, the applicant shall receive the approval of the Streets Department or its designee. The Streets Department, its designees, the Fairmount Park Commission, and its designees shall collectively be referred to as the "District."

4.8.3.3 An applicant shall first submit to the District a description of the duration of the proposed installation, the location of the proposed installation, the name of the applicant, and the purpose of the banner. The District shall grant approval provided that all of the following conditions are met:

(1) an applicant 's requested streetlight locations are available. Banner locations are scheduled by the District on a first-come, first-served basis.

(2) an applicant fits into at least one of the following categories:

a non-profit entity hosting an event, performance, or exhibit related to the group's mission.

a non-profit entity holding a fund-raising, educational, or anniversary campaign related to the group's mission.

an applicant celebrating a neighborhood or an historic site.

an applicant hosting an event, perf01mance, exhibit, fund- raising campaign, education campaign, anniversary campaign, neighborhood celebration, or historic site celebration, where the applicant's banner is of City-wide civic interest, such as where the applicant's banner describes an item taking place at the Avenue of the Arts, the Pennsylvania Convention Center, or the Sports Complex.

the banner is to be posted on a streetlight pole that is located in the same vicinity as the event, performance, exhibit, fund-raising campaign, education campaign, anniversary campaign, neighborhood, or historic site described in the banner, except if the banner relates to an item of City-wide civic interest, such as an item taking place at the Avenue of the Arts, the Pennsylvania Convention Center, or the Sports Complex.

4.8.3.4 Once the District has granted approval, an applicant shall then submit a full-color copy of a completed design to the Disttict and the Art Commission.

4.8.3.5 The Art Commission shall grant approval if the banner meets all of the following criteria:

A banner shall be designed with a small number of large, simple, bold elements, utilizing bright colors and strong contrast. Complex, ambiguous images with numerous small components shall be discouraged.

White or light-colored backgrounds shall be discouraged, to avoid soiling.

Type should be limited to as few words as possible, covering a maximu m of 25 percent of the banner, for reasons of legibility.

All type must be right-reading.

To the extent a banner proposed by a non-profit entity is sponsored by one or more for-profit entities, the banner may contain the for-profit entities' respective logos, subject to the following conditions:

each of the for-profit logos shall be positioned in a band at the bottom of the banner, unless a particular for-profit logo constitutes part of the title of the event or the campaign described in the banner, in which case that particular for- profit logo may be positioned in the main body of the banner; and

the total area of all of the for-profit logos on a banner (including both those in the main body of the banner and those in the band at the bottom of the banner) is limited to 1.5 square feet.

A banner shall be aesthetically suitable for its environment.

4.8.3.6 Once the design is approved by the District and the Art Commission, the applicant shall produce the approved banners, manufactured by a vendor approved by the District, using the following criteria.

In the jurisdiction of the Center City District (CCD), the Old City District (OCD), the South Street Headhouse District (SSHHD), or the Fairmount Park Commission:

A banner shall be no larger than 4 feet by 9 feet.

A banner shall contain a 7 inch double-stitched sleeve area at the top.

A banner shall contain two 5-inch by I -inch 206elcro tabs at the top of the banner sleeve, 1 inch from both openings.

A banner shall contain two D-ring tethers installed at 8 inches and 7 feet from the top. Webbing to attach the D-ring to the banner should be sewn using a heavy-duty nylon or polyester thread in a pattern forming an "x." Webbing should be reinforced with a #2 brass grommet.

A banner shall be mounted on a 1.5-inch diameter pole at the top of the banner and at both D-rings.

A banner shall be made from nylon or similar fabric, and shall not be made from vinyl/PVC or Sunbrella.

No banner shall span a City street.

A banner shall have a minimum bottom ground clearance of fifteen feet.

In the jurisdiction of the University City District:

A banner shall be no larger than 4 feet by 8 feet.

A banner shall contain a 5 inch double-stitched sleeve area at the top of the banner and at the bottom of the banner.

A banner shall contain two 4-inch by 1-inch 207elcro tabs on the top banner sleeve and two such tabs on the bottom banner sleeve, with all tabs *Y*,. inch from the edge.

Two banners shall be posted on each streetlight pole in a back-to-back fashion.

A banner shall contain a six-inch cut-out for center mounted hardware brackets at the top and bottom of the banner.

A banner shall be made from Sunbrella, nylon, or similar fabric, and shall not be made from vinyl/PVC.

No banner shall span a City street.

A banner shall have a minimum bottom ground clearance of fifteen feet.

For the remainder of the City:

A banner shall be no larger than 4 feet by 6 feet.

The top of the banner shall have a solid bracket and pole and shall be attached to an aluminum or fiberglass streetlight.

The bottom part of the banner shall be attached with a solid bracket with tether.

All brackets must have a rubber grommet between the bracket and the pole.

A banner shall be made from nylon or similar fabric.

No banner shall span a City street.

A banner shall have a minimum bottom ground clearance of fifteen feet.

4.8.3.7 An applicant wishing to post a banner inside the jurisdiction of the Fairmount Park Commission may do so, as long as the banner meets the criteria in sections 4.8.3.3, 4.8.3.5, and 4.8.3.6 and as long as the task of hanging the banners is performed by a qualified contractor, approved by the Fairmount Park Commission.

4.8.3.8 An applicant wishing to post a banner outside the jurisdiction of the CCD, OCD, SSHHD, and the UCD may do so, as long as the banner meets the criteria in sections 4.8.3.3, 4.8.3.5, and 4.8.3.6, and as long as the task of hanging the banners is performed by a qualified contractor, approved by the District.

4.8.3.9 An applicant wishing to post a banner in the jurisdiction of the CCD, OCD, SSHHD, or the UCD shall deliver the banner to the District. In the jurisdiction of the CCD, OCD, and SSHHD, the District shall approve only those banners that meet the criteria in sections 4.8.3.3, 4.8.3.5, and 4.8.3.6. In the jurisdiction of the UCD, the District shall approve only those banners that meet the criteria in 4.8.3.3, 4.8.3.5, and 4.8.3.6. Once the District has approved the posting of a banner on a streetlight in the jurisdiction of the CCD, OCD, SSHHD, or the UCD, the District shall post the produced banner.

4.8.3.10 Costs.

An applicant shall be responsible for all installation costs.

4.8.3.11 Repairs and reinstallation.

In the jurisdiction of the CCD, OCD, SSHHD, and the UCD, the District shall handle repairs and reinstallation of banners caused by weather or other unforeseen circumstances. The applicant shall be responsible for all costs of such repairs and reinstallation.

Inside the jurisdiction of the Fairmoun t Park Commission, the applicant shall be obligated to hire a qualified contractor, approved by the Fairmount Park Commission, to perform all repairs and reinstallation of banners caused by weather or other unforeseen circumstances.

Outside the jurisdiction of the CCD, OCD, SSHHD, and the UCD, the applicant shall be obligated to hire a qualified contractor, approved by the District, to perform all repairs and reinstallation of banners caused by weather or other unforeseen circumstances.

The City of Philadelphia is not responsible for loss of or damage to banners, or for any personal liability that may occur.

Applicants are required to carry liability insurance in such form and amounts sufficient, in the judgment of the City's Risk Manager, to cover the City, the District, and the banner installer for any losses or claims whatsoever, and the City, the District, and the banner installer shall be named as additional insureds on the applicant's policy. The Risk Manager may take into account any liability insurance purchased by the Business Improvement Distri ct in which the banner is posted.

4.8.3.12 A banner relating to an event shall be scheduled for removal no later than one week after the event ends. Other banners shall be posted no longer than six weeks, unless demand for the posting location is limited.

4.8.3.13 An applicant who has previously posted a banner at a location will have an opportunity to automatically renew for the next year by paying a non-refundable deposit to the District. An applicant who automatically renews a location must again obtain posting approval each year as described above in sections 4.8.3.2 through 4.8.3.12.

4.9 Parking in the Right-of-Way

4.9.1 On-Street Residential Parking for Disabled Persons

4.9.1.1 General. The purpose of this program by the City of Philadelphia is to provide accessible vehicle parking to Disabled Persons, as defined herein, who demonstrate need for access to their vehicles in order to maintain an independent lifestyle.

These regulations are promulgated pursuant to Section 12-1117(d) of The Philadelphia Code and 75 Pa. C.S.A. § 3354(d)(2), which provide for reserved on-street parking for disabled persons at their place of residence.

The Department of Streets hereby delegates to the Philadelphia Parking Authority responsibility for processing applications for, and determining entitlement to, reserved on-street residential parking for disabled persons, pursuant to these regulations.

4.9.1.2 Definitions

Disabled Person. A Disabled Person as under § 12-1117(1) of The Philadelphia Code, meaning any person who is eligible to receive a handicapped plate or handicapped parking placard under 75 Pa. C.S.A. § 1338, as amended from time to time, or any person who is eligible to receive a severely disabled veteran plate or severely disabled veteran placard under 75 Pa. C.S.A. § 1342, as amended from time to time.

Disabled-Person Parking Space. A Handicapped Parking Space as defined under § 12-1117(1)(k) of The Philadelphia Code, established on a residential street pursuant to these Regulations.

OAR. The Office of Administrative Review in the Office of the Director of Finance.

PPA. The Philadelphia Parking Authority.

4.9.1.3 Reserved Parking.

The PPA shall provide to any disabled person who meets the criteria set forth under Sections 4.9.1.5 and 4.9.1.6 a Disabled-Person Parking Space in front of his or her primary residence. Such parking space shall be identified by a sign or signs

indicating that the space is reserved for a disabled person, and that any unauthorized person parking there shall be subject to a fine.

No person shall acquire any ownership interest in any reserved parking space as a result of these regulations. The Department of Streets or its designee retains the right to eliminate a Disabled-Person Parking Space at any time.

4.9.1.4 Application Process. A Disabled Person whose primary residence is located in the City of Philadelphia may apply for a Disabled-Person Parking Space.

Application shall be made to the PPA for Disabled-Person Parking Spaces on such forms as the PPA may specify and provide. Applications shall be accompanied by such supporting documentation, including certification by a licensed physician of the applicant's disability, as the PPA shall require.

The PPA shall forward a copy of the application to the Department of Public Health for review under Section 4.9.1.5

The PPA shall grant the application and provide the requested parking space and accompanying signage upon:

Certification by the Department of Public Health or its designee that the applicant is a Disabled Person, pursuant to Section 4.9.1.5.

Determination by the PPA that the proposed Disabled-Person Parking Space is consistent with public safety and convenience, pursuant to Section 4.9.16.

4.9.1.5 Criteria for Department of Public Health Certification

Pursuant to §§ 12-1117(3) and (5) of The Philadelphia Code, the Department of Public Health or its designee shall certify to the PPA that the applicant is a Disabled Person if, based on the application information provided by the applicant, the applicant meets the definition of Disabled Person under Section 4.9.1.2. The Department of Public Health may require additional medical certification or additional medical evaluation, including a physical examination by a City of Philadelphia physician, if it finds that the initial application does not provide adequate information to make a determination.

4.9.1.6 Criteria for Philadelphia Parking Authority

Pursuant to §§ 12-1117(3) and (5) of The Philadelphia Code, a proposed Disabled-Person Parking Space shall be deemed practical and feasible with respect to traffic operations if it is consistent with public safety and convenience pursuant to the following criteria:

(1) The proposed Disabled-Person Parking Space meets traffic safety requirements, as follows:

(A) The proposed parking space must be twenty-two (22) feet in length.

(B) The proposed parking space shall not be in any location where parking is prohibited by state or local law, including but not limited to:

- within thirty feet (30') of a stop sign;
- within twenty feet (20') of an intersection or crosswalk;
- within fifteen feet (15') of a fire hydrant;
- on any block posted as a traffic or running lane;
- on any block with an AM or PM rush hour clearance;
- within a bus zone; or
- within a taxi zone.

(C) The parking space is otherwise consistent with traffic safety requirements.

(D) No accessible garage or driveway is available for off-street parking.

(E) The number of reserved on-street parking spaces on a blockface, including Disabled-Person Parking Spaces, does not exceed:

- on blocks with single-side parking – three (3);
- on blocks shorter than 500 feet in length, with parking on both sides – four (4);
- on blocks that are 500 feet or longer in length, with parking on both sides – five (5).

(2) The owner seeks and obtains any consent required as follows:

- Where the applicant is not the owner of his or her primary residence building, the applicant shall obtain written consent from the building owner for placement of a Disabled-Person Parking Space in front of the building. Where such consent is not obtained, the application shall be denied, provided that the applicant may appeal the denial in an administrative hearing under Section 4.9.1.7 to determine whether the application should be granted notwithstanding lack of consent.
- Where the proposed Disabled-Person Parking Space would infringe on the frontage of any neighboring property, the applicant shall obtain written consent from the owner of each such neighboring property for placement of the Disabled-Person Parking Space. Where consent is not obtained as to any such neighboring owner, the application shall be referred to the Office of Administrative Review for an administrative hearing under Section 4.9.1.7 to determine whether the application should be granted notwithstanding lack of consent.

4.9.1.7 Appeals

4.9.1.7.1 Right of Appeal. An applicant whose application for a Disabled-Person Parking Space has been denied by the PPA may appeal the denial

to an Appeals Panel of the OAR. An OAR Appeals Panel shall review the application of any applicant who has failed to obtain the consent of a neighboring property owner required under Section 4.9.1.6.

4.9.1.7.2 The Appeals Panel shall consist of an OAR Hearing Master, a designee of the Health Commissioner who shall have an appropriate medical background, and the Executive Director of the Mayor's Commission on People with Disabilities or his or her designee.

4.9.1.7.3 If an application does not meet the specified criteria set forth in these regulations, and if the applicant demonstrates hardship that supports the need to waive a specific requirement specified in these regulations, and if the panel, based upon consideration of all facts and circumstances presented, concludes that the objectives of the Code and these regulations would best be served by waiving a specific requirement of these regulations, then the panel may do so in the sound exercise of its discretion, provided that the result must comport with the Code and all other applicable law.

4.9.1.7.4 The Appeals Panel may deny the appeal of any applicant it finds has failed to make a good faith effort to obtain any consent required under Section 4.9.1.6.

4.9.1.7.5 Procedure.

(A) An appeal before the OAR shall be initiated in one of the following ways, as applicable.

(B) Appeals shall be filed with the OAR within thirty (30) days of denial of the application. Appeals shall be filed in duplicate, on forms provided by the OAR, with one copy forwarded to the PPA, and shall include the following information:

(C) The name and address of the applicant.

(D) A copy of the letter denying the application.

(E) A clear statement of the facts and reasons upon which the appeal is based.

(F) The applicant's signature and certification that the facts set forth therein are true.

4.9.1.7.6 Upon certification by the applicant that a neighbor from whom consent is required under Section 4.9.1.6 has refused such consent, or that despite applicant's good faith effort, such consent could not be obtained, the PPA shall refer the application to the OAR, and OAR shall review the referral in accordance with this Section, as if it were an appeal. The Applicant's certification that consent could not be obtained shall be included with the application at the time it is initially filed with the PPA.

Within thirty (30) days of the referral, the applicant may submit to the OAR a clear statement of the facts and reasons why the application should be granted, along with the applicant's signature and certification that the facts set forth therein are true.

4.9.1.7.7 Upon receipt of an appeal, the OAR shall give written notice of the date and time of the hearing on the appeal to the applicant, the PPA, and any property owner that has refused consent under 4.9.1.6.

4.9.1.7.8 The Appeals Panel shall accept testimony and documentation regarding the applicant's request for the Disabled-Person Parking Space, including but not limited to whether the request meets the criteria set forth in 4.9.1.6 for the granting of such parking spaces. Non-consenting property owners shall have the right to participate in the proceedings.

4.9.1.7.9 The burden of proof shall be on the applicant to prove by a preponderance of the evidence that he or she meets the requirements for the approval of a Disabled-Person Parking Space. Formal rules of evidence shall not apply.

4.9.1.7.10 The Appeals Panel shall have discretion in reviewing the evidence to determine the weight and credibility to assign to all testimony and documentation presented.

4.9.1.7.11 Representation – In proceedings before the Appeals Panel:

(A) The applicant may appear on his or her own behalf, or may be represented by any person of his or her choosing, so long as such representative is either an attorney licensed to practice in Pennsylvania, or is not compensated for his or her services.

(B) Any property owner that has refused consent under 4.9.1.6 may appear on his or her own behalf, or may be represented by any person of his or her choosing, so long as such representative is either an attorney licensed to practice in Pennsylvania, or is not compensated for his or her services.

(C) The Department of Streets may be represented by a designee of the PPA Executive Director.

4.9.1.7.12 Proceedings

(A) Hearings on any appeal will be conducted in a location that is accessible to people with disabilities.

(B) All hearings of the Appeal Panel shall be open to the public.

4.9.1.7.13 Continuances

The granting of a continuance for cause shown shall be discretionary with the Appeals Panel. Requests for continuances must be received in writing

within at least seven (7) calendar days prior to the date of the scheduled hearing except in cases of unforeseeable circumstances.

4.9.1.7.14 Decisions

(A) The Appeals Panel shall deny the appeal; grant the appeal and direct that the Disabled-Person Parking Space be established as set forth in the application; or grant the appeal and direct that a Disabled-Person Parking Space be established upon modified terms.

(B) All decisions of the Appeals Panel shall be in writing. Prompt notice of panel decisions shall be given to the applicant, the appropriate City official, and any property owner that refused consent under VI(1)(d).

(C) All decisions of the Appeals Panel shall be final.

4.9.2 Electric Vehicle Parking Spaces

4.9.2.1 General

This Regulation is issued pursuant to § 12-1131 of The Philadelphia Code, which provides for reserved parking for electric vehicles.

The Department of Streets hereby delegates to the Philadelphia Parking Authority, to the extent not expressly reserved to the Department of Streets or another agency by this Regulation, the authority to administer the granting, establishing, and administration of Electric Vehicle Parking Spaces.

4.9.2.2 Definitions. The definitions set forth in § 12-1131(1) shall apply to this Regulation, and, further, the following terms shall have the following meanings:

EVC. Electric Vehicle Charger, as defined by § 12-1131(1).

EVPS. Electric Vehicle Parking Space, as defined by § 12-1131(1).

NEC. National Electrical Code (NFPA 70), published by the National Fire Protection Association, as in effect in the City of Philadelphia at the time of installation.

PennDOT. The Pennsylvania Department of Transportation.

PPA. The Philadelphia Parking Authority.

4.9.2.3 Application Process

Applicants shall provide all of the following to PPA:

A PennDOT vehicle registration indicating that the electric vehicle is owned or leased by an individual who is a resident of the address at which the reserved parking space is sought.

A copy of the applicant's current driver's license identifying the applicant and showing the applicant's current address. A copy of an amending document, issued by the same agency that issued the driver's license, showing an updated address, shall be acceptable proof of address when accompanied by a copy of the original driver's license.

Proof that the owner of the property at which the reserved parking space is sought, if such person is not the applicant, consents to the placement of an EVPS in front of the property.

Where the proposed parking space would encroach on the frontage of any neighboring property, written consent from the owners of all such properties.

A clear photograph showing the entire area in which the EVPS would be located, and the front of all property abutting the proposed EVPS.

A scale plan of the right of way in front of property for 20 feet on either side of property, showing the entire width of the street, with labels indicating directions of travel, and the entire width of the sidewalk abutting the property. Where the electric vehicle requires a space larger than 20 feet on the longest side, a description of vehicle from the manufacturer showing the vehicle length shall also be included.

If the applicant seeks Department of Streets approval for less than five feet of passable sidewalk space such request shall be made with the application, and PPA shall forward the request to the Department of Streets for review.

A $50 application fee.

Following approval of the EVPS by PPA, a copy of the application to the Department of Licenses and Inspection for an electrical permit to install an EVC at the EVPS.

4.9.2.4 Approval of Proposed EVPS by PPA

Upon the filing of an application with PPA pursuant to 4.9.2.3, the PPA shall investigate the proposed EVPS location to determine whether it is practical and feasible with respect to traffic operations. A proposed EVPS shall be deemed practical and feasible with respect to traffic operations if it is consistent with public safety and convenience pursuant to the following criteria:

The proposed EVPS meets traffic safety requirements, as follows:

The proposed EVPS must be no more than 20 feet in length, unless a greater length is necessary, based on the size of the vehicle.

The proposed EVPS shall not be in any location where parking is currently prohibited by state or local law.

The proposed EVPS is otherwise consistent with traffic safety.

No garage, driveway, or other location not in the right of way is available to the applicant for parking of the Electric Vehicle.

The number of reserved on-street parking spaces, of any kind, on a blockface, does not exceed:

on blocks with single-side parking – three (3);

on blocks shorter than 500 feet in length, with parking on both sides – four (4);

on blocks that are 500 feet or longer in length, with parking on both sides – five (5).

The proposed EVC shall not interfere with pedestrian movement on the sidewalk, and shall leave at least five feet of passable space between the EVC and the edge of the sidewalk farthest from the street. Where the total space required under this subsection is insufficient to allow five feet of passable space between the EVC and the edge of the sidewalk farthest from the street, an applicant may, pursuant to § 2(1)(g), request a smaller width of passable space that permits free passage of pedestrians and conforms to law, but in no event shall such width be less than three feet. The EVC shall be placed at least two feet, but not more than three feet, from the point where the curb abuts the street.

PPA shall not approve an EVPS where the applicant is liable for any delinquent fines or penalties under § 12-2809(2) of the Code.

Approval by the Department of Licenses and Inspections and Installation of Electric Vehicle Charger.

4.9.2.5 Following approval by PPA pursuant to 4.9.2.3 of this Regulation, the applicant shall apply for an electrical permit from the Department of Licenses and Inspections for the installation of an EVC. Installations shall conform to the NEC, including provisions of the NEC specific to Electric Vehicle Charging Systems, and be performed by a licensed electrical contactor pursuant to an electrical permit from the Department of Licenses and Inspections. The following additional criteria shall govern such installation as a condition of placing it in the sidewalk, unless otherwise specified by the Department of Licenses and Inspections, or the NEC imposes a more stringent requirement:

The EVC must be located on a dedicated branch circuit with ground fault circuit protection at the main panel.

A shut-off switch for the EVC must be installed inside the applicant’s residence at the point of ingress and egress nearest the EVPS.

The receptacle at which the Electric Vehicle is connected to the EVC must be secured by an outdoor weatherproof, lockable, NEC-compliant enclosure that will

prevent tampering and unintentional contact with any portion of the EVC that is or may be electrified.

The receptacle at which the Electric Vehicle is connected to the EVC must be no higher than 48 inches from the ground.

There shall be no commercial use associated with the EVC.

The electrical permit required by this section shall be obtained prior to the installation of the EVC, or the commencement of any work thereon.

4.9.2.6 Establishment of EVPS

An EVPS, once approved by PPA, shall not be established unless installation of the EVC is complete, and complies with 4.9.2.1 of this Regulation.

Upon installation of a properly functioning EVC, the PPA or the Department of Streets shall:

Post the required signs designating the EVPS; and

Mark the pavement to designate the EVPS. The Department of Streets may, in the alternative, provide the applicant with a permit to so mark the pavement, subject to such requirements as the Department of Streets may impose.

4.9.2.7 Fee

The fee for an EVPS shall be in the same amount and determined in the same manner as the fee for a curb loading zone pursuant to § 12-905 of the Code.

The fee shall initially be due upon approval by the Department of Licenses and Inspections of an electrical permit for the installation of an EVC.

An EVPS may be revoked, and the EVPS and EVC may be removed by the Department of Streets or the PPA if such yearly renewal fee as required under § 12-905 is not timely paid in accordance therewith.

4.9.2.8 Other Matters

The person to whom an EVPS has been issued shall immediately notify the PPA, and the EVPS may be immediately revoked, if any of the following events occur:

The registration or license plate is transferred to a Non-Electric Vehicle;

The Electric Vehicle is transferred to another owner who does not reside at the address for which the EVPS was established;

The owner of the Electric Vehicle ceases to reside at the address for which the EVPS was established.

An EVPS may be revoked under any of the following circumstances:

Any condition necessary for the grant of the EVPS under this Regulation ceases to be met.

The EVC or its associated wiring is not maintained in good repair or presents a hazard due to deterioration, malfunction, or improper use.

Any excavation of the right of way for installation or maintenance of the EVC or associated wiring is not properly restored.

The owner of an Electric Vehicle with respect to which an EVPS has been granted shall notify PPA of the registration of any other Electric Vehicle that such person intends to park in the EVPS regularly.

An EVC shall be removed within 30 days of the revocation of an EVPS.

No person shall acquire any ownership interest or exclusive parking rights in an EVPS. PPA may eliminate an EVPS at any time if the EVPS or the owner of the Electric Vehicle ceases to conform to the requirements of § 12-1131 or this Regulation.

4.9.3 Bicycle Parking Regulations

4.9.3.1 Scope. These regulations support the bicycle parking provisions of Section 14-1400 of the Philadelphia Code, entitled "Parking and Loading Facilities" and Section 11-600 of the Philadelphia Code, entitled "Construction, Encroachments and Projections Over, On and Under Streets".

4.9.3.2 Bicycle Parking on Private Property

Bicycle Rack.

A bicycle rack shall follow one of the following design guidelines:

- The "Philadelphia Standard U-Rack" as specified in Philadelphia Streets Department drawing "M0082";
- An "Art" rack as described in 4.9.3.4 of these regulations;
- A commercially available bicycle parking rack that complies with design guidelines published by the Association of Pedestrian and Bicycle Professionals (APBP) and is approved by the Department of Streets.

A minimum of 24-in. clear space shall be provided adjacent to a rack such that a bicyclist can easily maneuver a bicycle into position. When bicycle racks installed parallel to each other, the rack elements shall be a minimum of 36 in. apart.

All racks shall be installed in artificially illuminated areas.

Bicycle racks shall serve no other purpose in addition to the securing of bicycles.

Bicycle racks proposed to be installed on or abutting a City of Philadelphia historically certified property or within a City of Philadelphia certified historical district shall be approved in advance by the Philadelphia Historical Commission.

When bicycle racks are installed for compliance with the bicycle parking requirements of the Philadelphia Zoning Code, the proposed rack locations shall be shown on the zoning site plan.

Bicycle Storage Room

A bicycle storage room shall be located internally to the building served.

The storage room shall be equipped with artificial illumination and ventilation and be physically separated from other storage or uses.

"Bicycle Storage Room" signage shall be permanently mounted on the doors.

Doors to the storage room shall be lockable from the outside.

Facilities shall be provided within the storage room for users to attach a personal bicycle lock to secure each bicycle.

Bicycle Storage Locker

A bicycle storage locker shall be completely enclosed and weather-proof, except for an optional opening of up to nine (9) inches at the base, to allow for security inspections.

The storage locker shall be designed to withstand a minimum force of 200 lbs/sf on all surfaces, doors and windows (when provided).

The locker shall be of sufficient size to store a bicycle within the locker with both wheels on the floor

Each compartment within the locker shall store no more than one bicycle.

The locker shall be accessible from ground level. Stacked lockers are not permitted.

Each locker compartment shall be provided with a secure keyed lock.

4.9.3.3 Bicycle Racks Installed in the Public Right-of-Way

Bicycle racks shall be installed in a location in which they do not interfere with building entrances or exits, fire hydrants, loading zones, bus zones or the safe passage of pedestrians. See Philadelphia Streets Department drawing "M0082L" for required clearances. Final location shall be at the discretion of the Philadelphia Streets Department.

The minimum acceptable paved sidewalk width on which a bicycle rack may be installed shall be 12-ft.

Bicycle racks shall be installed only on solid concrete sidewalks (no pavers or bricks).

Racks must be secured with bolts that do not penetrate below the depth of the concrete sidewalk.

Bicycle racks proposed to be installed on or abutting a City of Philadelphia historically certified property must be approved in advance by the Philadelphia Historical Commission.

The sponsor of a bicycle rack must obtain a permit from the Department of Streets' Right-of-Way unit. The permit fee shall be twenty-five (25) dollars per rack.

The sponsor of the bicycle rack shall submit the following materials to the Streets Department:

An application and maintenance agreement for the rack;

A letter of approval from the abutting property owner;

Pictures of the proposed location;

A scalable site plan that indicates the proposed location of the rack, building entrances and exits, bus stops and any existing sidewalk obstructions.

The sponsor of the bicycle rack shall be responsible for all maintenance, including:

Removing any abandoned bicycles, bicycle locks or chains on a regular basis and keeping the area in a neat and clean condition;

Performing routine inspection of the bicycle racks and keeping them in good visual condition;

Removing graffiti and stickers and applying touch-up paint as needed.

When bicycle racks are installed for compliance with the bicycle parking requirements of the Philadelphia Zoning Code, the proposed rack locations shall be shown on the zoning site plan.

Approval of bicycle rack locations shown on the zoning site plan by the Streets Department Bureau of Surveys & Design locations shall constitute the Streets Department approval required by section 14-1401 (4).

4.9.3.4 "Art" Racks – Additional Provisions

An "Art" rack shall be defined as any rack other than the "Philadelphia Standard U-Rack" or a commercially available rack approved by the Philadelphia Streets Department for general use. "Art" racks are typically designed to be site specific.

"Art" racks shall be capable of securing two standard bicycles.

The "Art" rack shall provide a minimum of two points of contact with the bicycle.

The design (including installation details) of any rack with an overall height greater than 42-in. shall be sealed by a professional engineer registered in the Commonwealth of Pennsylvania.

The maximum overall height of an "Art" rack installed in the public right-of-way shall be 72-in.

The design of an "Art" rack including the installation details shall be reviewed and approved by the Department of Streets' Bureau of Surveys and Design.

Approval of the Philadelphia Art Commission is required for "Art" racks proposed to be installed in the public right-of-way.

Chapter 5 Regulations Specifying Special Deisgnations

5.1 Regulations Designating Shared Use Paths and Sidewalks

5.1.1 Definitions. Shared Use Path shall mean a sidewalk designated by the Department of Streets to support multiple uses, such as walking, biking, and in-line skating, and marked with appropriate signs.

5.1.2 Designation. The Streets Department designates the following locations, as described below, as Shared Use Paths.

5.1.3 Installation. All Shared Use Paths must be installed in accordance with plans approved by the Streets Department after consideration of the recommendations of the Philadelphia City Planning Commission

5.1.4 Locations

Race Street Sidepath:

Race Street (north side) from Delaware Avenue to 2nd Street.

58th Street Greenway:

Chester Avenue (south side) from 59th Street to 58th Street;

58th Street (west side) from Chester Avenue to Elmwood Avenue with exception of short section at railroad tracks;

Lindbergh Boulevard (south side) from Elmwood Avenue to Harley Street.

Port Richmond Trail:

Allegheny Avenue (north side) from Richmond Street to southbound I-95 ramps;

Allegheny Avenue (south side) from southbound I-95 ramps to Delaware Avenue;

Delaware Avenue (east side) from Allegheny Avenue to Lewis Street.

Baxter Trail Sidepath:

State Road (east side) from Pennypack Street to Linden Avenue.

5.2 Regulations Designating Snow Emergency Routes

5.2.1 Snow Emergency Routes. Pursuant to Section 12-2502 of The Traffic Code of the City of Philadelphia the Street Commissioner hereby designates the heavily traveled and necessary thoroughfares listed in Schedule "A" as "Snow Emergency Routes."

5.2.2 Schedule "A"

Academy Road – Frankford Avenue to Grant Avenue;

Allegheny Avenue – Hunting Park Avenue to 1-95 on/off-ramps;

Benjamin Franklin Parkway – Art Museum Circle to Sixteenth Street;

Bridge Street – Harbison Avenue to 1-95 on-ram p;

Broad Street – Cheltenham Avenue to 1-95 on/off-ramps;

Bustleton Aven ue – Frankford Avenue to County Line Road;

Chestnut Street – Cobbs Creek Parkway to Twentieth Street;

City Avenue – City Boundary to 1-76 on-ram p;

Cobbs Creek Parkway – Walnut Street to Woodland Avenue;

Cottman Avenue – 1-95 off-ramp to Fillmore Street;

Enterprise Avenue – Island Avenue to 1-95 on/off-ramps;

Fifteenth Street – 1-676 off-ram p to Market Street.

Germantown Avenue – North Broad Street to Northwestern Avenue;

Girard Avenue – Lancaster Avenue to 1-95 on/off-ramps;

Grant Avenue – Welsh Road to Academy Road;

Grays Ferry Avenue – Thirty-fourth Street to Washington Avenue.

Harbison Avenue- Bridge Street to Roosevelt Boulevard;

Henry Avenue – Cathedral Road to Hunting Park Avenue;

Hunting Park Avenue – Henry Avenue to Kelly Drive;

Island Avenue – Woodland Avenue to Enterprise Avenue;

Kelly Drive – Lincoln Drive to Art Museum Circle;

Lancaster Avenue – City Avenue to Girard Avenue;

Lincoln Drive – Ridge Avenue to Wissahickon Avenue;

Market Street – Schuylkill Avenue to I-95 on-ramp;

Ogontz Avenue – Washington Lane to Cheltenham Avenue;

Poplar Street – West College Avenue to Girard Avenue;

Princeton Avenue – Torresdale Avenue to I-95 on/off ramps;

Ridge Avenue (North) – Northwestern Avenue to Cathedral Road;

Ridge Avenue (South) – Walnut Lane to City Avenue on-ramp;

Roosevelt Boulevard – Ninth Street to City Boundary;

Schuylkill Avenue – Market Street to Walnut Street;

Sedgley Avenue – Allegheny Avenue to Allegheny Avenue;

Seventh Street – Market Street to I-676 off-ramp;

Sixteenth Street – Market Street to I-676 off-ramp;

Sixth Street – I-676 off-ramp to Market Street;

Sixty-third Street – City Avenue to Walnut Street;

Stenton Avenue – Northwestern Avenue to Broad Street;

Tacony Street/State Road – Bridge Street to Tacony-Palmyra Bridge;

Thirty-eighth Street – Walnut Street to University Avenue;

Thirty-fourth Street – University Avenue to grays Ferry Avenue;

Torresdale Avenue – Cottman Avenue to Princeton Avenue;

Twentieth Street – Chestnut Street to Market Street;

Twenty-sixth Street – I-76 on/off ramps to Penrose Avenue;

University Avenue – Thirty-eighth street / Thirty-ninth street to Thirty-fourth street;

Walnut Lane – Wayne Avenue to Ridge Avenue;

Walnut Street – Broad Street to Cobbs Creek Parkway;

Washington Avenue – Grays Ferry Avenue to Christopher Columbus Boulevard;

Washington Lane – Wayne Avenue to Ogontz Avenue;

Wayne Avenue – Walnut Lane to Washington Lane;

Welsh Road – City Boundary to Grant Avenue;

West College Avenue – Poplar Street to Girard Avenue;

West River Drive – Art Museum Circle to Falls Bridge

Wissahickon Avenue – Lincoln Drive to Walnut Lane;

Woodland Avenue – Cobbs Creek Parkway to University Avenue.

5.3 Prohibition on Parking of Motor Vehicles on Non-Public Streets

5.3.1 Towing Zones. Pursuant to Section 12-2403 of The Philadelphia Code pertaining to towing zones, the following private service streets are designated as "No Parking-Towing Zone":

The "U" shaped street entering and exiting on Park Towne place;

The street paralleling the Vine Street Expressway and Twenty-fourth street;

The connecting ramps between the streets referred to in subsection (1) and (2) above; except that parking shall be permitted within the specific locations described as follows:

On the east side of the west leg of the "U"-shaped road starting at a point 100 feet from the intersection of the center lines of Park Towne place and the west leg of the "U"-shaped road and extending for a distance of 137 feet.

On the west side of the east leg of the "U"-shaped road starting at a point 40 feet from the intersection of the center lines of Park Towne place and the east leg of the "U"-shaped road and extending for a distance of 19 feet.

On the west side of the east leg of the "U"-shaped road starting at a point 140 feet from the intersection of the center lines of Park Towne place and the east leg of the "U"-shaped road and extending for a distance of 37 feet.

On the north side of the south leg of the "U"-shaped road starting at a point 43 feet from the center line of the east leg of the "U"-shaped road and extending for a distance of 233.50 feet.

On the east side of the ramp starting at a point 33.0 feet from the intersection of the center lines of the ramp and the south leg of the "U"-shaped road and extending for a distance of 122.24 feet.

5.3.2 Penalties. Any person violating the provisions of this ordinance shall be subject to the penalties provided in Chapter 12-2400 of The Philadelphia Code.

Chapter 6 – Communications Antennas

6.1 Communications Antennas

6.1.1 Authority. These Regulations Governing Communication Antenna Facilities in the public Right-of-Way are promulgated pursuant to Section 5-500 of The Philadelphia Home Rule Charter and Chapter 9-300 of The Philadelphia Code.

6.1.2 Definitions. In these Regulations, the following definitions shall apply.

"Affiliate" means a person who (directly or indirectly) owns or controls, is owned or controlled by, or is under common ownership or control with another person.

"Application" means an application filed with the Department of Streets requesting permission to install Communication Antenna Facilities in the public Right-of-Way.

"Associated Facilities" means any equipment that facilitates transmission for a wireless antenna, including, but not limited to coaxial or fiber-optic cable, strand-mounted equipment and regular and backup power supply and other supporting devices installed above the ground, but does not include a pole or structure on which the Communication Antenna Facilities are located.

"Carrier" means a person or entity authorized by the Federal Communication Commission and any other regulatory agency to operate a telecommunication system to provide telecommunications services.

"City-owned Infrastructure" means street light poles, traffic signal devices and similar infrastructure owned by the City and located in the public Right-of-Way.

"Collocate" or "Collocation" means installing or maintaining multiple Communication Antenna Facilities belonging to more than one Provider on a single support structure.

"Commissioner" shall mean Commissioner of the Department of Streets or his or her designee.

"Communication Antenna Facilities" or "Facilities" means equipment necessary or incidental to the distribution of and use of telecommunications services including, but not limited to, antennas, small cell nodes, distributed antenna systems (DAS) and associated facilities for "personal wireless services," as that term is defined in 47 U.S.C. § 332(c)(7)(C), and "commercial mobile services," as that term is defined in 47 U.S.C. § 332(d).

"Communication Antenna Facilities Public Right-of-Way Use Permit" ("CAP") means a permit issued by the Department authorizing Provider to occupy a discreet location of the public Right-of- Way to maintain, install, remove or modify Communication Antennas Facilities.

"Department" means the City of Philadelphia's Department of Streets.

"Existing Facilities" means Facilities located in the public Right-of-Way and authorized by a permit issued by the City prior to the effective date of these Regulations.

"Guaranteed Pavement Information System" ("GPIS") means the online permitting system developed for and used by the Department in connection with the Department's street opening permit process.

"Historic building" has the meaning as defined in the Zoning Code, subsection 14-203(147) of The Philadelphia Code.

“Master License Agreement” means a license agreement entered into by the City and a Provider setting forth the particular terms and provisions under which the City has granted a Provider the right to make use of City-owned Infrastructure in the public Right-of-Way for installation of Communication Antenna Facilities.

“Modification” means any addition to, partial removal of, or alteration of any kind to Communication Antenna Facilities, including routine maintenance or alteration of appearance.

“PECO” means the electricity delivery company known as PECO Energy Company, an Exelon Corporation or any successor electricity delivery company.

“Permitted Location” means the portions of the public Right-of-Way in which Provider has received the Department’s approval to construct and install Communication Antenna Facilities pursuant to this Regulation and for which a CAP has been obtained from the Department.

“Provider” means a corporation, company, association, firm, partnership, person or entity that owns, operates or manages any facilities used to provide telecommunications service for hire, sale, or resale to the general public. “Provider” includes Affiliate(s) and/or the legal successor(s) to any such corporation, company, association, firm, partnership, person or entity.

“Public Right-of-Way” or “public ROW” means the Right-of-Way as defined in Chapter 11-700 of The Philadelphia Code.

“Routine Maintenance” means an in-kind Modification of a component of Communication Antenna Facilities or other similar de minimis changes.

“Street Occupancy Permit” means a permit required under The Philadelphia Code and/or Department Regulations and issued by the Department authorizing the temporary (partial or full) closure of the public ROW, including the roadway and/or footway, for the temporary placement of equipment necessary to perform work.

“Street Opening Permit” means the permit required under the Philadelphia Code and/or Department Regulations and issued by the Department to authorize a party to open the street or excavate within the public ROW.

“Telecommunications service” means the transmission of information by wire, radio, optical cable, electromagnetic, or other similar means for hire, sale, or resale to the general public. For the purpose of this definition, “information” means knowledge or intelligence represented by any form of writing, signs, signals, pictures, sounds, or any other symbols. For the purpose of this chapter, telecommunications service excludes over-the-air transmission of broadcast television or broadcast radio signals.

“Utility Pole” means a pole or vertical structure owned by PECO or another utility company that is located in the public ROW pursuant to State law authorization or City franchise agreement to support electric utility or wireline Communication Antenna Facilities. Utility Poles as defined herein shall not be considered “towers” or “tower structures” as defined in Section 14-601(4)(o)(.2) of the City Code.

6.1.3 Communication Antenna Facilities Public Right-of-Way Permit.

No Provider or other person shall maintain, install, modify, replace or remove any Communication Antenna Facilities on any pole or other structure located in the public ROW without a CAP.

6.1.4 Application for Communication Antenna Facilities Public ROW Permit (CAP)

6.1.4.1 An Application for a CAP shall be filed with the Department using the City's on-line portal. A separate Application must be filed for each requested location.

6.1.4.2 Applications with respect to all Communication Antenna Facilities, whether existing, new, modified or replaced, shall include

The name of the applicant, including all Affiliates of applicant;

Applicant contact information including address, telephone number and email address;

A listing of all Provider's Communication Antenna Facilities (existing & proposed);

Identification of the pole location using the City's map and identification system in the on-line system, which shall include identification of whether the pole is City-owned or utility-owned; and

Information regarding whether the applicant would be willing to Collocate.

6.1.4.3 An application in connection with Existing Faciities shall be submitted on the form attached to these Regulations as Exhibit "B," which form may be changed from time to time, and shall in addition to the information requested on the form also include:

Approval documentation from the Department for location of the Existing Facilities in the public ROW;

Documentation of permission from the pole owner for installation and maintenance of the Existing Facilities;

As-built engineering plans for the Existing Facilities;

Photos of Existing Facilities as attached to the Utility Pole or City-owned Infrastructure;

Proof of Insurance, as required pursuant to these Regulations; and

Agreement to comply with the terms of these Regulations.

6.1.4.4 An Application to install Facilities in a new location, to modify Existing Facilities (except as provided in subsection 6.1.4.5 below) or to replace or remove Facilities shall be submitted on the form attached to these Regulations as Exhibit

"A," which form may be changed from time to time, and shall in addition to the information requested on the form also include:

Information to establish that Provider has all other governmental approvals and permits necessary to construct and operate the Communication Antenna Facilities;

Proof of Insurance, as required pursuant to these Regulations;

List components of the Communication Antenna Facilities (in tabular format). A sample form is attached as Exhibit "C" to these Regulations;

Map showing the proposed location of the Facilities with identification of any park, school or Historic building within 300 feet of the proposed location;

Representative drawings and pictures of the Communication Antenna Facilities as they will look when installed, including the immediate surrounding area. Design drawings shall also include plans for the design and concealment of Communication Antenna Facilities, and portions thereof, if applicable;

Engineering and construction plans, design drawings and photos of all Communication Antenna Facilities;

Proposal for collocation, if collocation is requested;

Identification of proposed location of connection to electrical supply or of any fiber connection required, including the identification of any planned interconnection with the Facilities of any other Providers;

Written confirmation of agreement between Provider and utility owner that Provider has authority to attach to Utility Pole;

RF Emissions Report and Noise Report confirming that all Communication Antenna Facilities, and associated equipment, meet all applicable legal requirements;

Structural calculations, signed by a Professional Engineer, licensed in the Commonwealth of Pennsylvania, showing that the structure can safely tolerate the weight loads of proposed Communication Antenna Facilities;

6.1.4.5 Agreement to comply with the terms of these Regulations.

6.1.4.6 An Application regarding a Modification that involves only Routine Maintenance or a modification of appearance shall include the information required under subsection 6.1.4.2 and information identifying the Modification to be made. A new design drawing shall be submitted if changes are made that are not reflected on the originally submitted drawing.

6.1.5 Completeness Review

6.1.5.1 The Department shall review an application for completeness and will

notify the Provider in writing if additional or missing information is required. The notice shall identify any information that must be submitted to the Department to make the Application complete.

6.1.5.2 Upon applicant's subsequent submission, the Department shall notify the applicant if the Application remains incomplete and the Department shall identify any information that must be submitted to make the Application complete.

6.1.5.3 If missing or additional information is not submitted to the Department within thirty (30) days of a written notice requesting additional information, the Department shall provide applicant with written notice that its Application has been deemed withdrawn.

6.1.5.4 The Department will provide applicant with written notice of a completed Application and will invoice applicant the Application Review Fee, in accordance with Section 8. Except as provided with respect to Applications regarding Existing Facilities, full payment of the Application Review Fee is required before the Department will proceed with its determination regarding issuance of the CAP.

6.1.6 Issuance/Denial of CAP

6.1.6.1 The Department, shall issue a written determination granting or denying the application. If the application is denied, the written determination shall include the reason(s) for denial.

6.1.6.2 Upon determination that an application for Existing Facilities is complete, the Department shall grant the CAP for up to such time period as the applicant has demonstrated authorization to occupy the pole, but in no event for longer than 10 years. Modification or removal of Existing Facilities requires filing a new Application for a CAP.

6.1.6.3 The decision to grant or deny a CAP regarding new Facilities or a modification or replacement of Facilities, shall be based upon the following standards:

Whether the Provider has received all requisite licenses, certificates, and authorizations from the Federal Communications Commission, the Pennsylvania Public Utilities Commission and any other federal or state agency with jurisdiction over the activities proposed by the Provider;

Compliance with the City's Development Standards set forth in Section 9;

Whether the proposed Communication Antenna Facilities will unreasonably interfere with the public ROW, including whether the proposal negatively impacts the aesthetics of the public ROW to an unreasonable degree;

The damage or disruption, if any, to public or private facilities, improvements, service, travel or landscaping if the CAP is granted;

Whether the proposal presents an unreasonable risk to public health, safety or welfare;

Whether the Provider has permission from the owner of the Utility Pole;

Whether the Provider has an uncured default under: i) any prior CAP; ii) these Regulations or iii) a Master License Agreement between City and Provider; and

Whether the requested site has already been approved as a Permitted Location.

6.1.6.4 Unless otherwise specified in a CAP, a CAP shall provide an authorization for twenty (20) years.

6.1.7 Approval Rights

No authorization granted under these Regulations shall confer any exclusive right, privilege, license or permit to occupy or use the public ROW for delivery of personal wireless services or commercial mobile services or for any other purposes.

The City specifically reserves the right to install, and permit others to install Facilities in the public ROW. The City shall not be liable to Provider for any damage caused by third parties permitted to install Facilities or otherwise authorized to utilize the public ROW.

No authorization granted under these Regulations shall convey any right, title or interest in the public ROW, but shall be deemed an authorization only to use and occupy the public ROW for the limited purposes and term stated in the authorization.

Authorization granted under these Regulations is subject to the existing uses, as well as, the prior and continuing right of the City to use the public ROW for municipal and public purposes.

6.1.8 Fees. The fee for a CAP Application review is $400 per Application. The fee is waived for initial Applications in connection with Existing Facilities and Applications in connection with a Modification involving solely Routine Maintenance

or a modification of appearance.

The program fee for inspection of installations and administration of the Facilities program is $50 per year per CAP. No program fee shall be charged in connection a CAP during the first calendar year of its issuance.

Provider shall, within thirty (30) days after written demand, reimburse the City for any and all costs the City reasonably incurs in response to any emergency involving Provider's Communication Antenna Facilities.

6.1.9 Development Standards

All new and modified Facilities shall be subject to the following standards:

The dimensions of the Facilities shall not exceed 6 feet in height, 2 feet in width, and 2 feet in depth, unless an exception is authorized by the Commissioner based on a determination that larger dimensions will not unreasonably interfere with the public ROW.

Facilities shall not exceed 24 cubic feet per facility. No more than 48 cubic feet of Facilities are permitted on a single pole, unless an exception is authorized by the Commissioner based on a determination that additional Facilities will not unreasonably interfere with the public ROW.

Facilities shall be installed above the surface of the public ROW at a minimum elevation which is the lower of 20 feet or the lowest pole-supported strand based on a review by the Chief Streets Lighting Engineer, or his/her designee. An exception to this height requirement may be granted on a case-to-case basis based on the Commissioner's determination that a lower height will not unreasonably interfere with the public ROW. Installation or placement of Facilities, or any portion thereof, on the surface of the public ROW is prohibited.

Facilities shall not extend more than 3 feet as measured from the edge of the vertical structure of the Utility Pole.

Except for permitted Collocation, no Facilities shall be within 300 feet of other permitted Facilities, per block face, unless an exception is authorized by the Commissioner based on a determination that Facilities within such proximity will not unreasonably interfere with the public ROW.

No more than two CAPs shall be granted at an intersection of streets unless an exception is authorized by the Commissioner based on a determination that more than

two sets of Facilities at a particular intersection will not unreasonably interfere with the public ROW.

Installation of Communication Antenna Facilities within 300 feet of the boundary line of a City Park is prohibited unless approved, in writing, by the Department of Parks and Recreation, based on a determination that the installation will not negatively impact on Park use.

Installation of Communication Antenna Facilities on any part of a bridge, overpass, or tunnel within the city, or a structure located on a bridge, overpass or tunnel is prohibited.

Installation of Communication Antenna Facilities on a structure located in a street or portion of

the public ROW that is 15 feet or less in width and that is adjacent to primarily residential properties is prohibited, unless, an exception is authorized by the Commissioner based on a determination that such a location will not unreasonably interfere with the public ROW.

Facilities shall be enclosed in an equipment box or other concealing unit that may include ventilation openings.

Facilities shall, at a minimum, display the following in an area on the equipment box or other concealing unit in a manner visible to the public:

Company Name
Company Node ID
Location
Streets Department CAP Authorization Number
Streets Department CAP Date
Emergency telephone contact information

Displays or signs shall not exceed 4” x 6”, unless otherwise required by law or the Department.

Placement of advertising on Facilities or in the public ROW is prohibited.

Facilities must be connected to the electrical grid and may not be powered by a generator for primary power or for back-up power except as deemed necessary by the Commissioner to maintain public safety.

Cables and wires must be located inside the interior of all non-wooden poles. External cables and wires for facilities on wooden poles shall be sheathed or enclosed in a conduit so that wires are protected and are visually minimized.

Installation of aerial wires is permitted only for connecting the Facilities to wires or junction boxes on the Utility Pole to which the Facilities are attached.

Underground junction boxes in the public ROW shall be similar in size to the City's "standard" junction box. A junction box must be rated "tier 22", or approved equal, to sustain live loads without damage. The junction box cover must be labeled with the company name outside. All interior wires must be labeled, kept in good condition and replaced, if faded or missing. Junction box dimensions and placement locations are subject to Department approval.

Facilities shall comply with the federal radio frequency (RF) emissions standards set forth in Federal Communications Commission OET Bulletin 65 (as may be amended).

6.1.10 Compliance with Other Laws. Compliance with all applicable City, State, and federal statutes and regulations is mandatory while any CAP is in effect.

6.1.11 Master License Agreement. No authorization to attach to City-owned Infrastructure shall be deemed to have been granted upon issuance of a CAP unless the Provider and the City have executed a Master License Agreement.

6.1.12 Inventory and Accounting. Each Provider shall maintain a list of the locations of its Communication Antenna Facilities located in the public ROW while any CAP is in effect and shall provide the Department with an accounting of its current inventory each year on the first business day in January.

6.1.13 Renewal of CAP. A Provider that desires to renew an expiring CAP shall, not more than one hundred eighty (180) days nor less than ninety (90) days before expiration of the CAP, file an application with the Department pursuant to the requirements of these Regulations.

6.1.14 Provider Assurance. Provider must confirm, in writing, that the owner of the Utility Pole agrees to remove Provider's Facilities in the event Provider fails to remove its Facilities upon the City's determination of a violation under these Regulations and receipt of notice to remove.

6.1.15 Street Occupancy and Opening Permits and Deadlines for Installation; Construction and Restoration Standards

Upon issuance of a CAP, the Provider may apply for a Street Occupancy Permit, for occupancy of the public ROW for installation, modification or removal of Facilities, or a Street Opening Permit, as may be required for associated electrical or fiber underground conduit, as may be necessary for installation of the Facilities.

Any required Street Occupancy Permit or Street Opening Permit shall be applied for within ninety (90) days after the Department issues a CAP.

Installation of authorized Communication Antenna Facilities shall be completed within one- hundred and eighty (180) days from the date of issuance of the CAP, unless an extension is granted by the Department based on a showing of good cause.

The Department may rescind a CAP based on failure to meet a deadline set forth in this Section.

Communication Antenna Facilities shall be installed in conformance with plans submitted in connection with issuance of the CAP. Installation, maintenance, repair and removal of underground components of Communication Antenna Facilities shall be accomplished without cost or expense to the City. If components include underground communication cable, the installation, repair, removal shall be in accordance with all applicable requirements of the Philadelphia Code and relevant City Regulations. All work in the public ROW shall be accomplished in such manner as not to endanger persons or property or unreasonably obstruct access to, travel upon or other use of the public ROW.

Prior to beginning any work in the public ROW, Provider shall comply with the provisions of the Pennsylvania One Call utility locator service at least forty-eight (48) hours in advance. Provider has the responsibility to protect and support the various utility facilities of other entities during Provider's work.

Provider shall, at its own cost, after the installation, removal or relocation of its Communication Antenna Facilities, repair and return the public ROW and any impacted private property to a safe and no worse condition than at the start of work.

Provider shall be responsible for any damage to public ROW, existing utilities, curbs and sidewalks due to its installation, maintenance, repair or removal of its Communication Antenna Facilities and shall repair, replace and restore, in-kind, any such damage at its sole cost and expense, in accordance with all applicable City requirements.

6.1.16 Removal or Power Down of Communication Antenna Facilities

Department may require Provider, at Provider's sole expense, to modify, remove or power down permitted Facilities: (a) to accommodate a governmental or municipal project; (b) for the construction, repair, relocation, or maintenance of a public improvement in, on, under or about the public ROW; (c) to protect the public health and safety or otherwise serve the public interest; or (d) because of Interference, as set

forth in Section 19.

The Department will provide written notice to Provider as soon as reasonably practical, of the requirement to remove, modify or power down, which requirement shall be completed within such time as the Department may reasonably direct.

If, after delivery of written notice and a reasonable opportunity to respond, Provider fails or refuses to comply with a written notice to follow such a requirement, the Department shall have the authority to remove, modify or power down the Facilities at the sole cost of Provider. Provider shall be responsible for, and liable to, the City for any and all costs associated with such action.

If Provider intends to remove or relocate any of its Communication Antenna Facilities in the public ROW, it shall give the Department not less than ten (10) days written notice of its intent to do so. Before proceeding with removal or relocation work, Provider shall obtain such additional permits as may be required by the Department and adhere to all applicable Department Regulations.

6.1.17 Non-Use of Communication Antenna Facilities.

No later than thirty (30) days prior to the proposed termination of use of any permitted Communication Antenna Facilities, Provider shall submit to the Department written notification identifying the Communication Antenna Facilities and the date of the proposed termination of use.

Provider shall remain responsible for Facilities which Provider stops utilizing until such time as the Facilities are removed and the public ROW repaired under the requirements of these Regulations.

The City shall not be deemed the owner or responsible party for any property owned, or used and/or abandoned in place by Provider.

Provider's continuous abandonment of permitted Communication Antenna Facilities within the public ROW, and failure to respond to Department's written notice to remove or modify the same will result in removal, at Provider's sole cost, of such Communication Antenna Facilities.

6.1.18 Requirements to Maintain Permits

Failure to comply with any of the following requirements may result in revocation of a CAP:

Failure to pay any required fee and failure to cure such arrearage within thirty (30) days after receiving written notice from City;

Failure to maintain Insurance as required in these Regulations;

Failure to maintain any required licenses, permits, or other governmental approvals pertaining to the installation or use of Communication Antenna Facilities;

Failure to comply with any other requirements of these Regulations, including the "Development Standards" of Section 9.

Failure to provide Communication Antenna Facilities maintenance assurances if Provider becomes the subject of a voluntary or involuntary bankruptcy, receivership, insolvency or similar proceeding or an assignment is made of any of Provider's property for the benefit of creditors; or

Ongoing harmful interference, as set forth in Section 6.1.19 below.

6.1.19 Interference

Provider's Communication Antenna Facilities shall not cause harmful interference to the City's radio frequency, wireless network, or communication operations ("City Operations) or Communication Antenna Facilities used by other Providers with a CAP ("Protected Equipment").

In the event of interference with the City's Operations, Provider shall take steps necessary to correct and eliminate such interference within 24 hours of receipt of notice from the Department, or such shorter time as may be required in notice from the City in the event of a threat to public safety. In the event of interference with Protected Equipment, Provide shall take steps necessary to correct and eliminate such interference within 24 hours of receipt of notice from the City. If the interference is not resolved within the required time frame, Provider will power down the Communication Antenna Facilities causing interference, except for intermittent testing coordinated with the Department as part of the remedial process, until the interference is remedied.

Upon Department's request, Provider shall test the Communication Antenna Facilities' radio frequency and other functions to confirm it does not interfere with the City's current or future operations or Protected Equipment.

6.1.20 No Liability

The City shall not be liable to any Provider for any damage caused by other

Providers with Communication Antenna Facilities, whether sharing the same structure or otherwise.

The City shall not be liable to any Provider by reason of inconvenience, annoyance or injury to any Communication Antenna Facilities, or activities conducted by Provider therefrom, arising from the necessity of repairing any portion of the public ROW, or from the making of any necessary alteration or improvements, in, or to, any portion of the public ROW, or in, or to, City's fixtures, appurtenances or equipment.

6.1.21 Graffiti Abatement. Provider shall remove all graffiti on any of its permitted Communication Antenna Facilities as soon as practical, but not later than fourteen (14) days from the date Provider receives notice thereof. The foregoing shall not relieve the Provider from complying with any City graffiti or visual blight ordinance or regulation.

6.1.22 Tree Maintenance Prior to trimming trees hanging over Communication Antenna Facilities, written permission from the Department and the Department of Parks and Recreation is required. When directed by the Department, tree maintenance shall occur under the supervision and direction of the Department of Parks and Recreation. The City shall not be liable for any damages, injuries, or claims arising from Provider's actions pursuant to this Section.

6.1.23 Release and Indemnification

As a condition of its CAP, Provider agrees to and shall release the City, its agents, employees, officers, and legal representatives (collectively the "City") from all liability for injury, death, damage, or loss to persons or property sustained in connection with or incidental to performance under any Department -issued permit related to these Regulations, even if the injury, death, damage, or loss is caused by the City's concurrent negligence. Neither Provider nor City will be liable to the other for any indirect, incidental, special, consequential, or punitive damages, or lost profits for any claim arising out any Department-issued permit.

Provider agrees to and shall defend, indemnify, and hold harmless (collectively "indemnify" and "indemnification") the City, its agents, employees, officers, and legal representatives (collectively the "City Parties") for all third-party claims, suits, damages, liabilities, fines, and expenses including, without limitation, reasonable attorneys' fees, court costs, and all other defense costs (collectively "Losses") for injury, death, damage, or loss to persons or property sustained in connection with Provider's use or operation of any Communication Antenna Facilities, Utility Pole or City-owned Infrastructure including, without limitation those caused by Provider or its agents', employees', officers', directors', consultants' or subcontractors' actual or alleged negligence or intentional acts or omissions.

Provider's indemnification obligations under each CAP will survive for four (4) years

after the CAP expires or terminates.

6.1.24 Insurance Requirements

Provider shall, at its sole cost and expense, procure and maintain and shall ensure any contractor it engages to perform any work, installation and/or maintenance required under these Regulations to procure and maintain, substantially the same insurance with substantially the same limits as that required of Provider, the limits of coverage specified below. All insurance shall be procured from reputable insurers who are acceptable to the City of Philadelphia, and authorized or permitted to do business in the Commonwealth of Pennsylvania. All insurance required herein shall be written on an "occurrence" basis and not a "claims-made" basis. The City of Philadelphia, its officers, employees and agents, shall be included as an additional insured as their interests may appear under these Regulations on the Commercial General Liability and Automobile Liability insurance policies.

Notwithstanding the forgoing, Provider may, in its sole discretion, self-insure any of the required insurance under the same terms as required by this Regulation. In the event Provider elects to self-insure its obligation under these Regulations to include City as an additional insured, the following conditions apply: (i) City shall promptly provide Provider with written notice of any claim, demand, lawsuit, or the like for which it seeks coverage pursuant to this Section and provide Provider with copies of any demands, notices, summonses, or legal papers received in connection with such claim, demand, lawsuit, or the like; (ii) City shall not settle any such claim, demand, lawsuit, or the like without the prior written consent of Provider; and (iii) City shall fully cooperate with Provider in the defense of the claim, demand, lawsuit, or the like.Workers' Compensation and Employers' Liability

Workers Compensation – Statutory Limits.
Employers Liability:
$100,000 Each Accident - Bodily Injury by Accident;
$100,000 Each Employee - Bodily Injury by Disease;
$500,000 Policy limit - Bodily Injury by Disease;
Other states' insurance including Pennsylvania.

Commercial General Liability Insurance

Limit of Liability: $5,000,000 per occurrence for bodily injury (including death) and property damage liability; $2,000,000 personal and advertising injury;

$2,000,000 general aggregate for products/ completed operations. The City may require higher limits of liability, if in the City's sole discretion, the potential risks so warrants.

Coverage: Including but not limited to premises, operations, personal injury liability (employee exclusion deleted); employees as additional insureds, cross liability, property damage liability, products and completed operations; explosion, collapse and underground damage (XCU), independent contractors, and blanket contractual liability (including liability for Employee Injury assumed under a Contract) provided by the Standard ISO Policy Form or its equivalent.

Commercial Automobile Liability Insurance

Limit of Liability: $2,000,000 per occurrence combined single limit for bodily injury (including death) and property damage liability;

Coverage: Owned, hired and non-owned vehicles (Any Auto).

Deductibles: Provider shall be responsible for and pay any claims or losses to the extent of any deductible amounts and waives any claim it may have for the same against the City, its officers, employees or agents.

Waiver of Recovery/Subrogation: Provider waives any claim or right of subrogation to recover against the City, its officers, employees or agents and each of Provider's insurance policies must state that the issuer waives any claim or right of subrogation to recover against the City, its officers, employees or agents.

Primary Insurance: Each policy, except Workers Compensation, shall be primary and non- contributory in regards to any insurance or program of self-insurance maintained by the City.

Liability for Premium: Provider shall pay all insurance premiums, and the City shall not be obligated to pay any premiums.

Certificates of Insurance delivered to the City of Philadelphia, evidencing the required coverage shall be submitted to:

City of

Philadelphia
Risk Manager
One Parkway
1515 Arch Street, 14th Floor
Philadelphia, PA 19102

The required certificates of Insurance must be provided to the City 10 days prior to start of work or by the effective date of these Regulations. Provider shall submit to the City of Philadelphia's Risk Manager, endorsements evidencing the coverage required in this Section within thirty (30) days from the date of submitting the Certificates of Insurance. The City reserves the right to require Provider to furnish written responses from its authorized insurance carrier representatives to all inquiries made pertaining to the insurance required under these Regulations at any time upon ten (10) days written notice to Provider.

The insurance requirements set forth herein shall in no way be intended to modify, limit or reduce the indemnifications made in these Regulations by the Provider to the City or to limit the Provider's liability under these Regulations to the limits of the policy(ies) of insurance required to be maintained by Provider under these Regulations.

All insurance policies shall provide for at least thirty (30) days prior written notice to be given to the City of any cancellation or non-renewal of any required insurance that is not replaced. At least ten (10) business days prior to the expiration of each policy, Provider shall deliver to the City, a certificate of insurance evidencing the replacement policy(ies) to become effective immediately upon the termination of the previous policy(ies). Provider shall, in no event, permit any lapse in the insurance coverage required under these Regulations, and replacement coverage meeting the requirements of this Section shall be in effect prior to the expiration of the policy period.

In the event the Provider fails to procure and/or cause such insurance to be maintained, the City shall not be limited in the proof of any damages which the City may claim against Provider or any other person or entity to the amount of the insurance premium or premiums not paid or incurred and which would have been payable upon such insurance, but the City shall also be entitled to recover damages for such breach, the uninsured amount of any loss, damages and expenses of suit and costs, including without limitation, reasonable collection fees, suffered or incurred during any period when Provider shall have failed or neglected to provide the insurance as required

herein.

6.1.25 Effective Date. These Regulations shall be effective immediately.