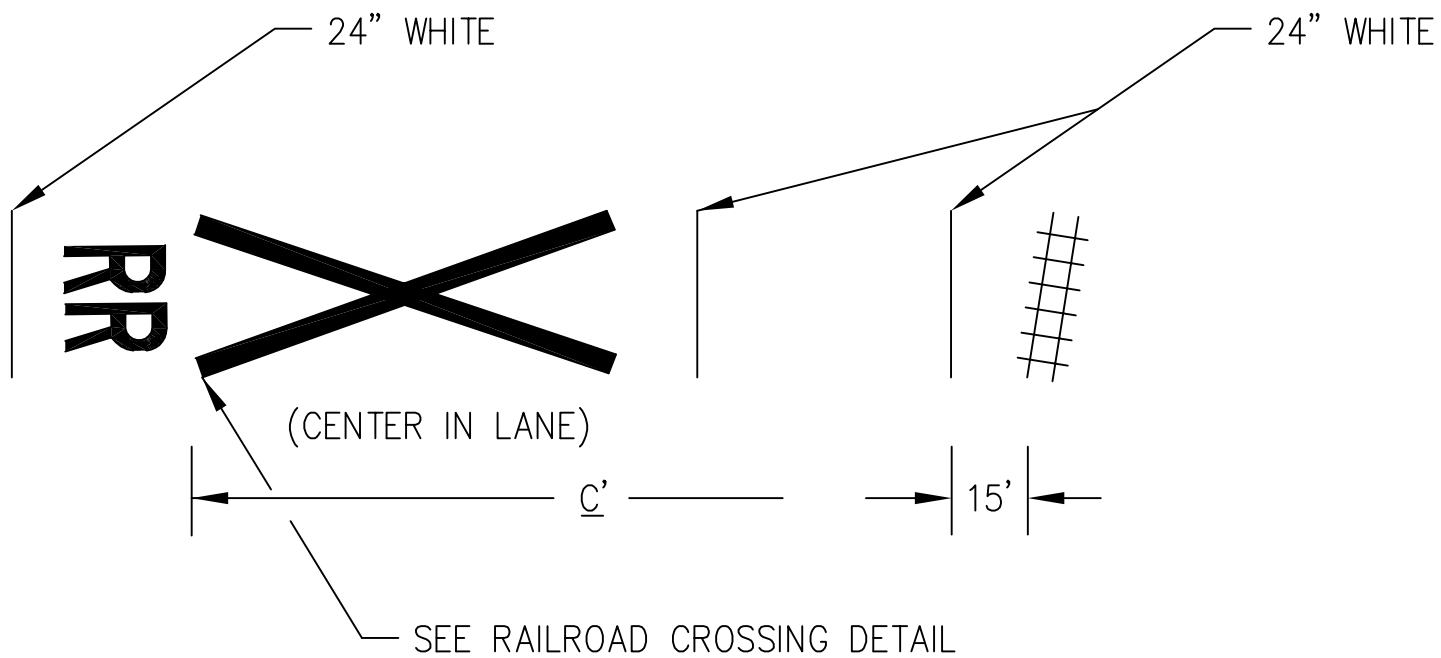

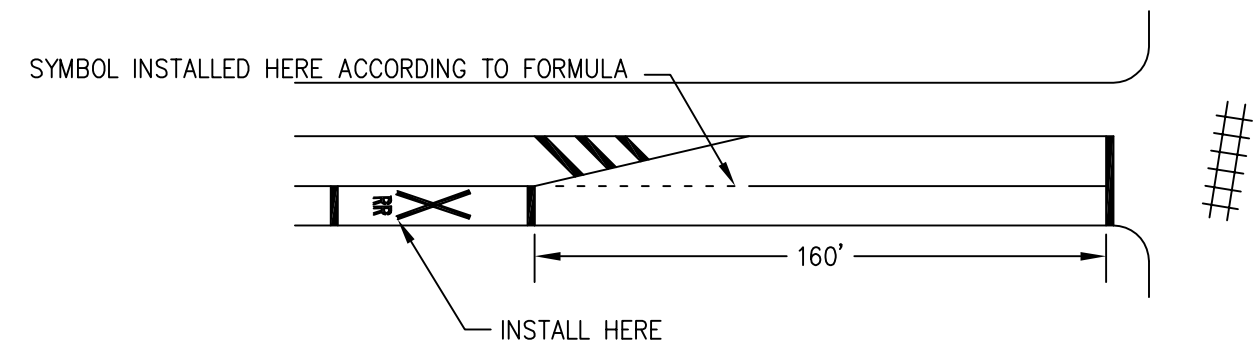

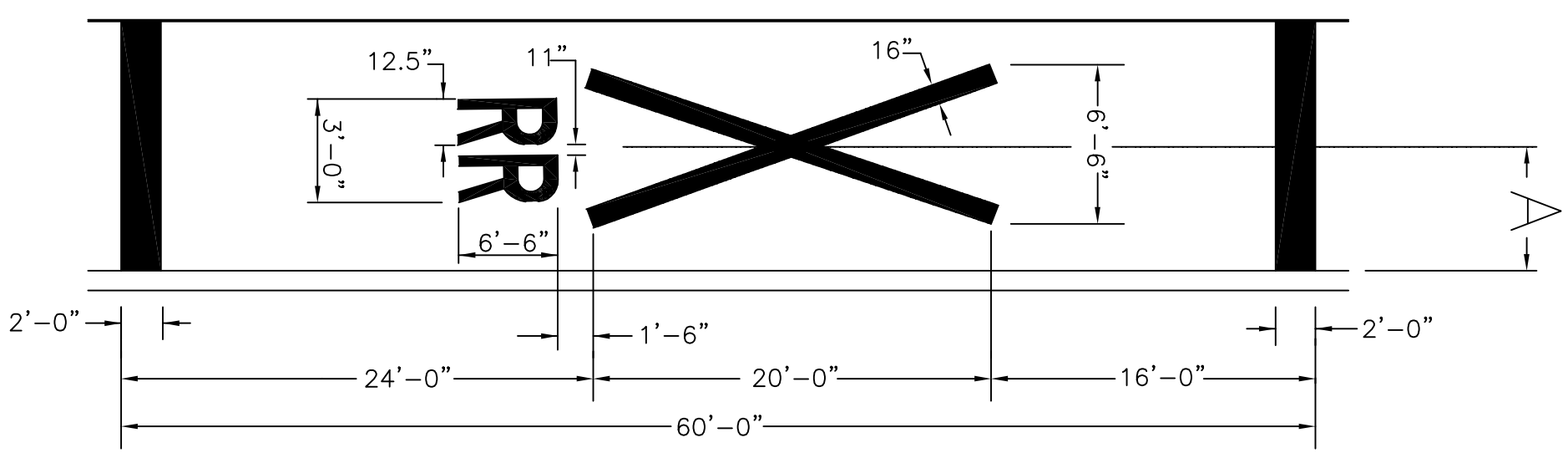

RAILROAD CROSSING MARKING

(NOT TO SCALE)

CITY OF PHILADELPHIA
DEPARTMENT OF STREETS

RAIL ROAD

DATE	11/05/14	SHEET 1 OF 1	DRAWING NO.
REVISED	3/06/15		PM0108
APPROVED: V.L.F.			